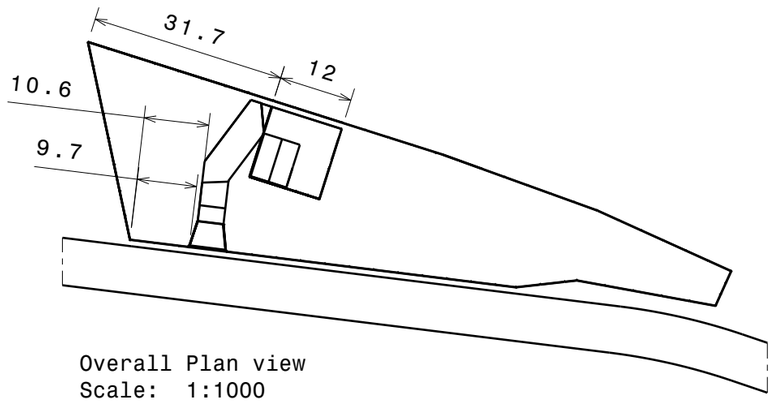

Overall Plan view
Scale: 1:1000

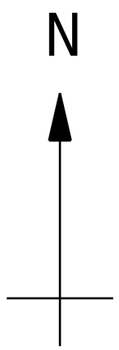

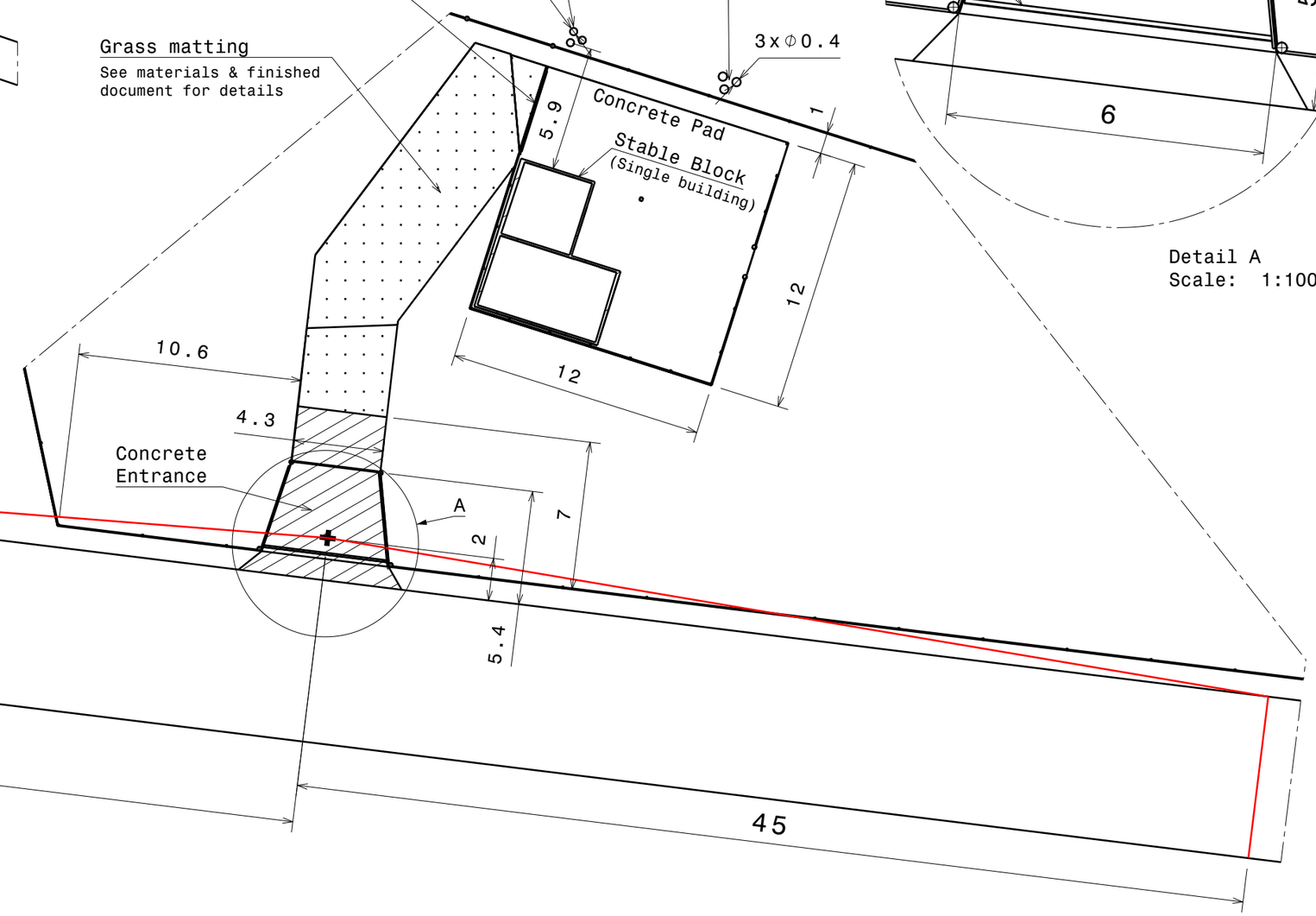

Detail Plan view
Scale: 1:250

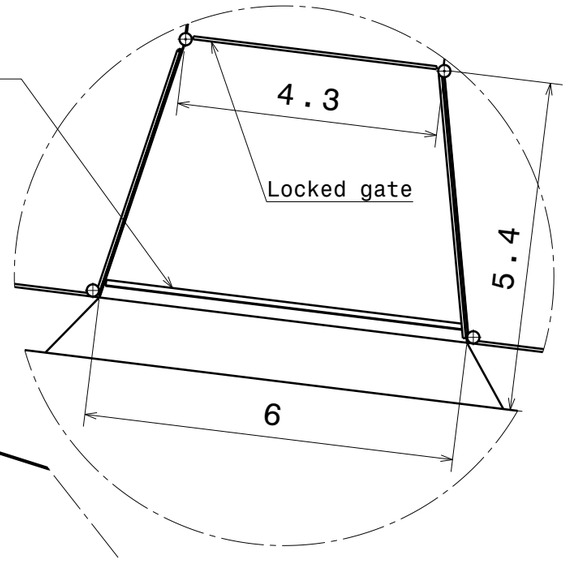

Detail A
Scale: 1:100

Mr George Grey
Erection of stables and storage barn, with hardstanding area, vehicular access, access track and associated engineering works and fencing.
Detail Plan view
Proposed development

Units: Metre

A3

G Grey	21/07/20	Addition of stable elevations, existing site section & revised site entrance	02	
G Grey	14/07/20	Original	01	Page
DRAWN	DATE	REVISION	ISSUE	1/7
IF IN DOUBT ASK		Drawing Number 1		

This drawing and copyright thereof are the property of George Grey
They must not be reproduced in part or whole or passed on to others without permission

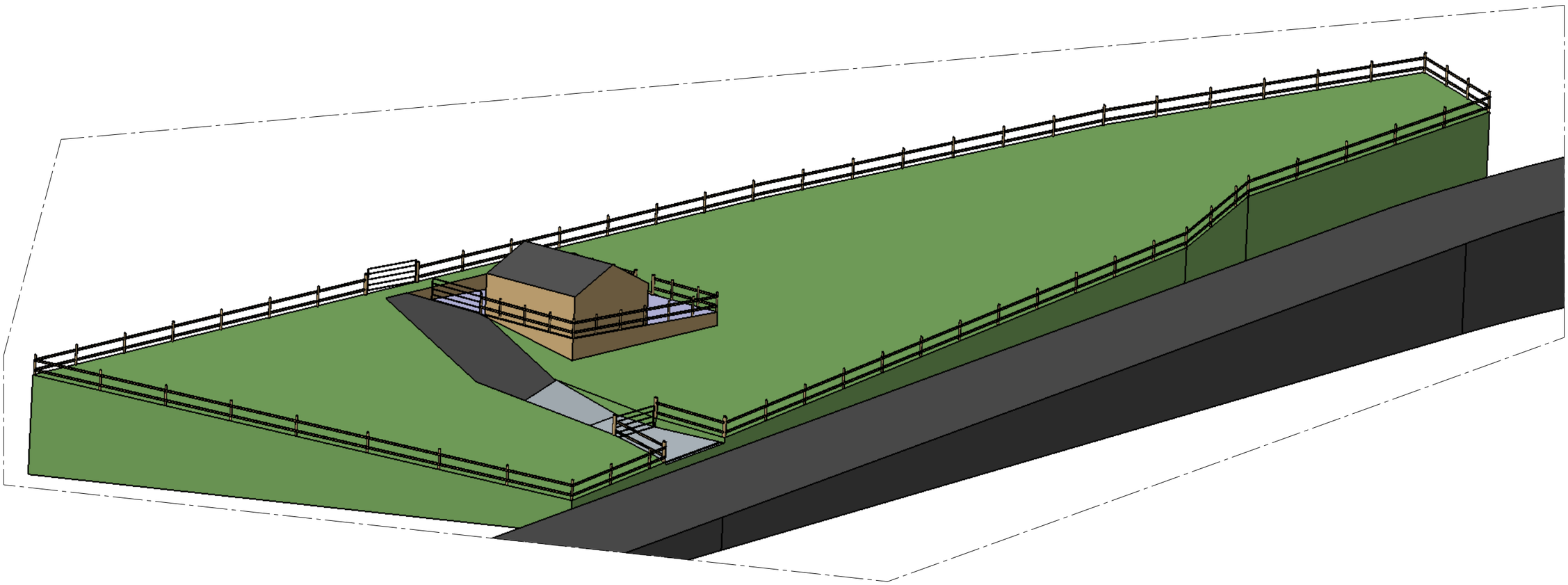

Proposed development overview
Scale: 1:250

Mr George Grey
Erection of stables and storage barn, with hardstanding area, vehicular access, access track and associated engineering works and fencing.
Development overview
Proposed development

Units: Metre

A3

G Grey	21/07/20	Addition of stable elevations, existing site section & revised site entrance	02	
G Grey	14/07/20	Original	01	Page
DRAWN	DATE	REVISION	ISSUE	2/7
IF IN DOUBT ASK			Drawing Number 1	

This drawing and copyright thereof are the property of George Grey
They must not be reproduced in part or whole or passed on to others without permission

Elevation Overview
Scale: 1:400

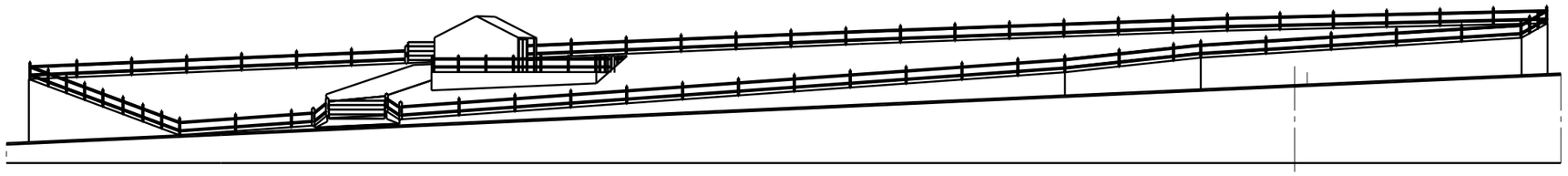

Elevataion Detail
Scale: 1:100

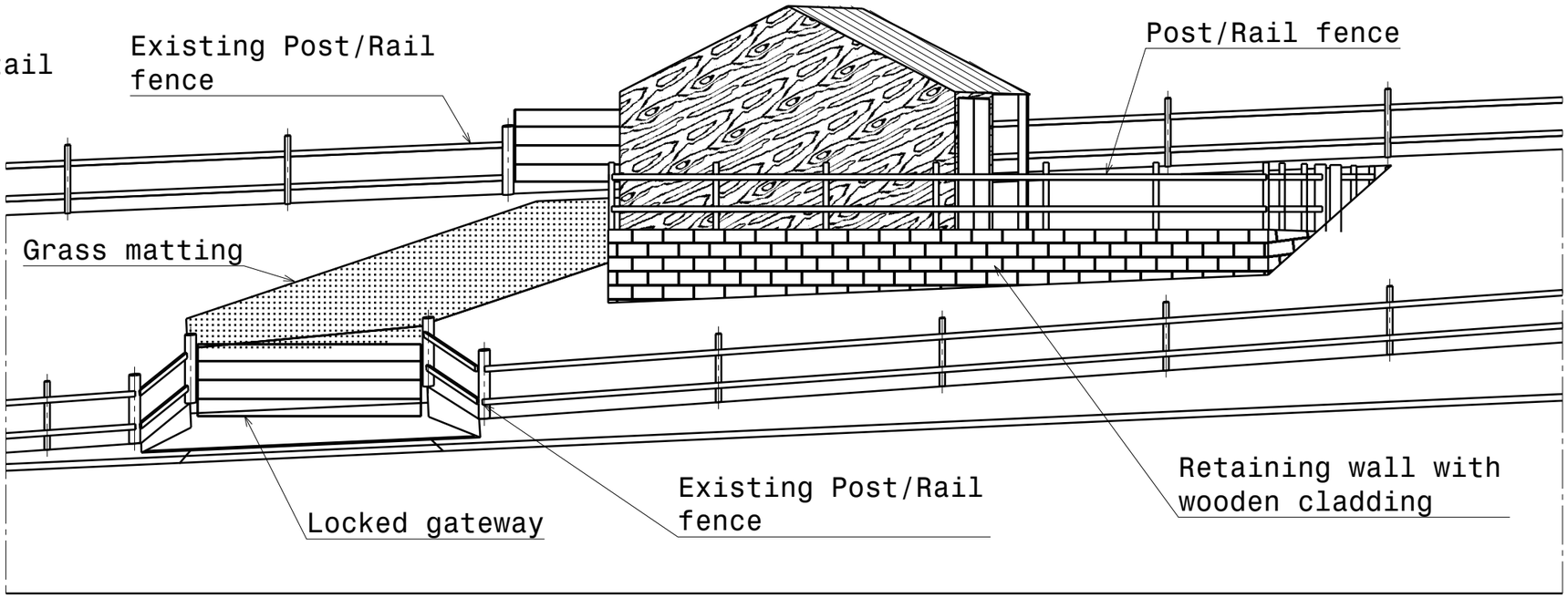

Mr George Grey
Erection of stables and storage barn, with hardstanding area, vehicular access, access track and associated engineering works and fencing.
Side elevation view
Proposed development

Units: Metre

A3

DRAWN	DATE	REVISION	ISSUE
G Grey	21/07/20	Addition of stable elevations, existing site section & revised site entrance	02
G Grey	14/07/20	Original	01

IF IN DOUBT ASK

Drawing Number 1

Page 3/7

This drawing and copyright thereof are the property of George Grey
They must not be reproduced in part or whole or passed on to others without permission

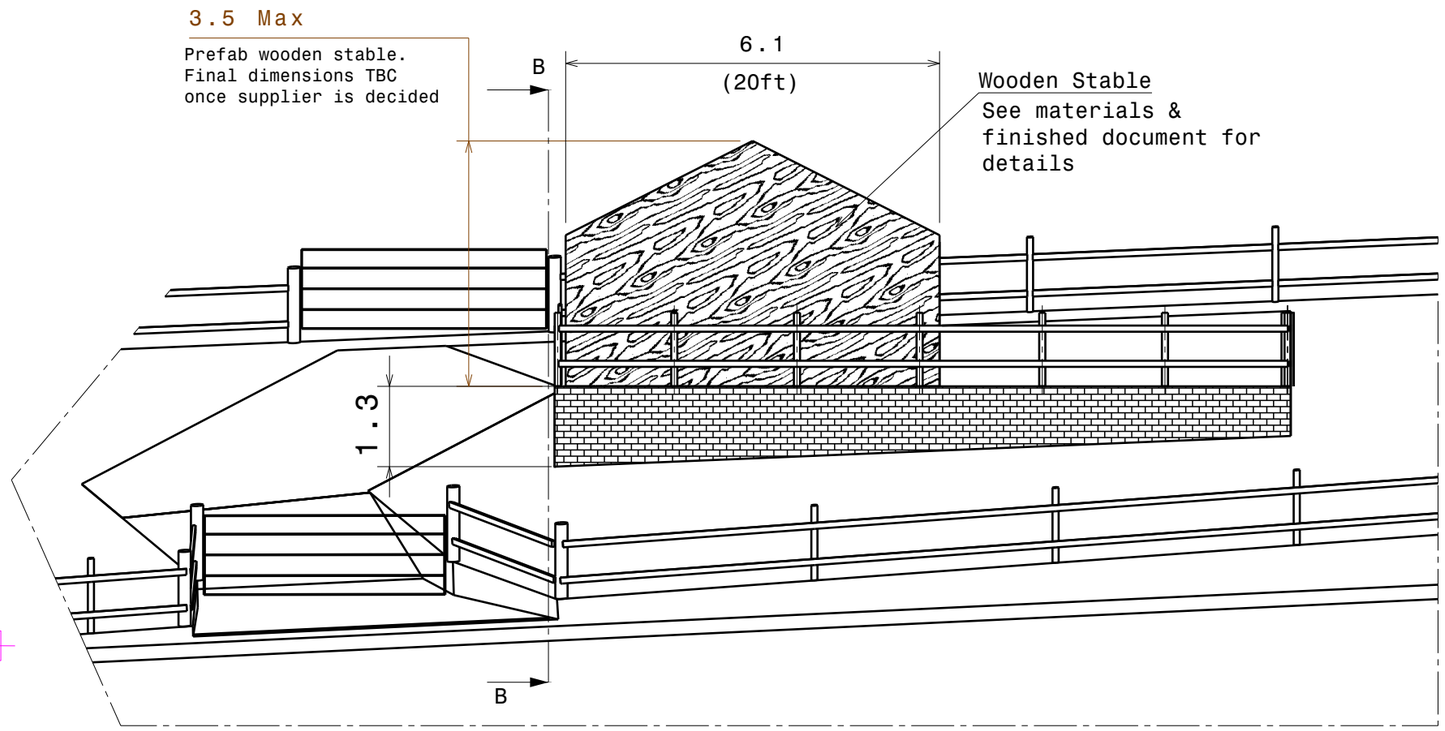

Side Elevation - Stable block
Scale: 1:100

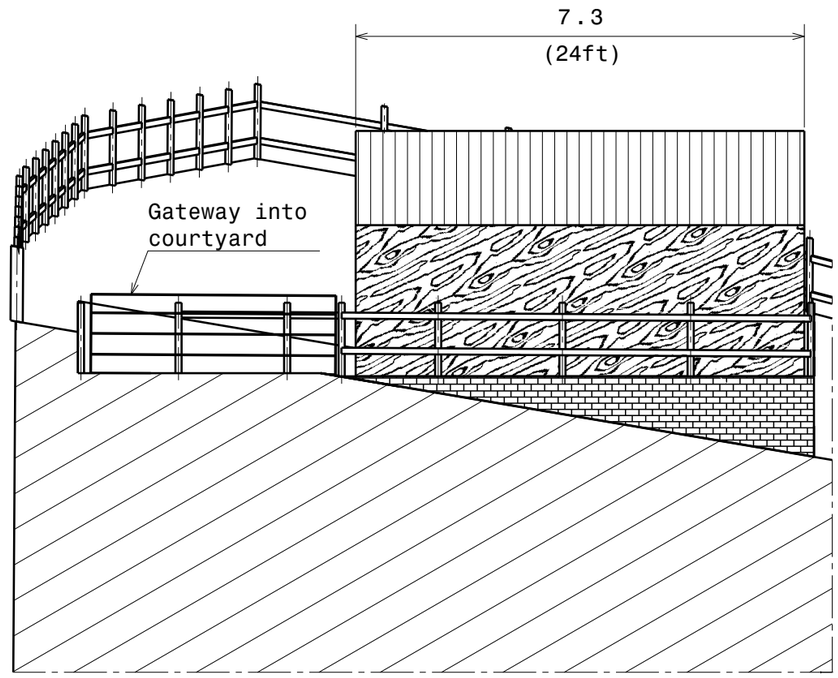

Section view B-B
Scale: 1:100

Mr George Grey
Erection of stables and storage barn, with hardstanding area, vehicular access, access track and associated engineering works and fencing.
Stable block elevation view - In situ
Proposed development

Units: Metre

A3

DRAWN	DATE	REVISION	ISSUE
G Grey	21/07/20	Addition of stable elevations, existing site section & revised site entrance	02
G Grey	14/07/20	Original	01

IF IN DOUBT ASK

Drawing Number 1

Page 4/7

This drawing and copyright thereof are the property of George Grey
They must not be reproduced in part or whole or passed on to others without permission

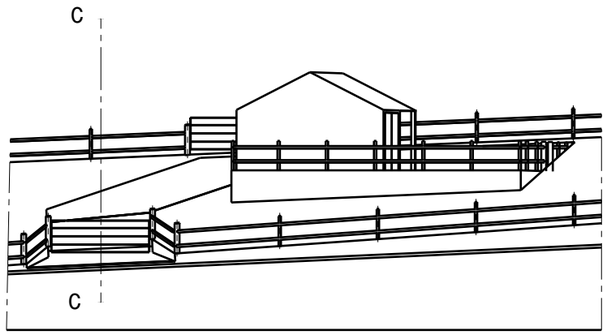

Road entrance details
Scale: 1:250

Section view C-C
Scale: 1:100

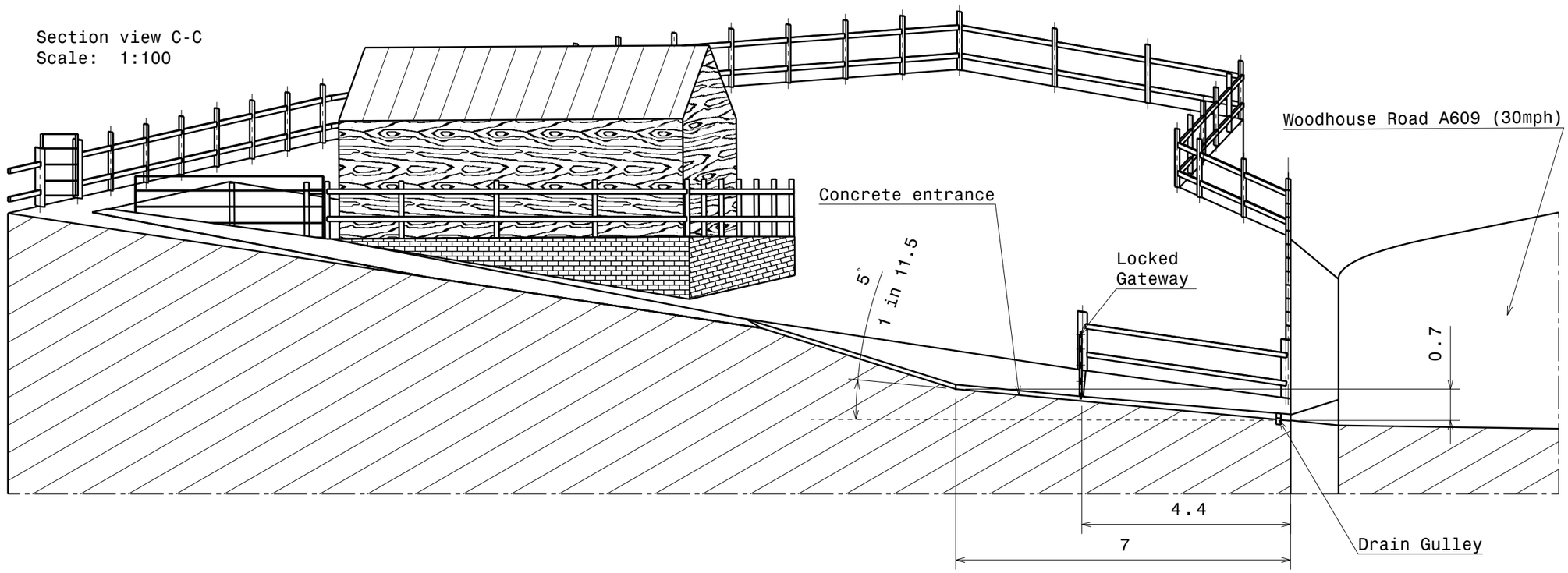

Mr George Grey
Erection of stables and storage barn, with hardstanding area, vehicular access, access track and associated engineering works and fencing.
Road entrance details & gradient
Proposed development

Units: Metre

A3

G Grey	21/07/20	Addition of stable elevations, existing site section & revised site entrance	02	
G Grey	14/07/20	Original	01	Page
DRAWN	DATE	REVISION	ISSUE	5/7

IF IN DOUBT ASK

Drawing Number 1

This drawing and copyright thereof are the property of George Grey
They must not be reproduced in part or whole or passed on to others without permission

Prefab wooden stable.
Final dimension TBC once
supplier is decided

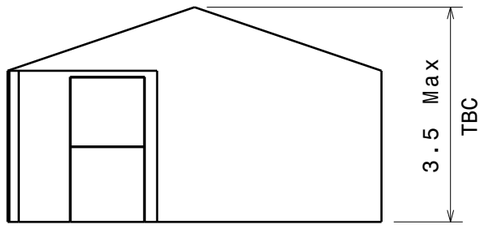

Right view
Scale: 1:100

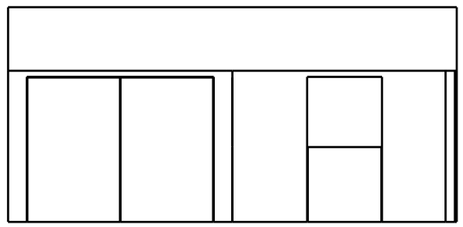

Front view
Scale: 1:100

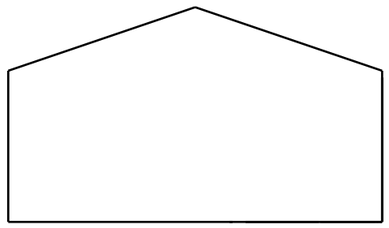

Left view
Scale: 1:100

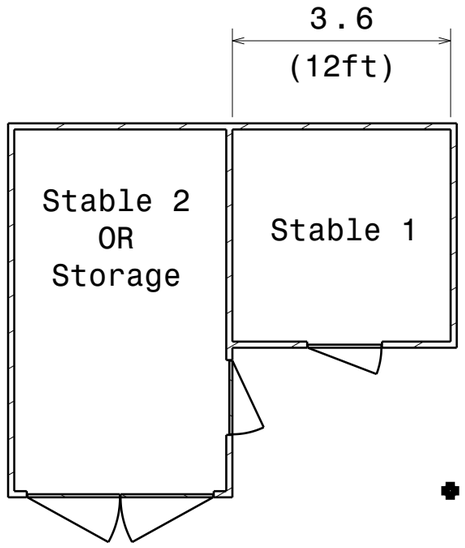

Floor Plan
Scale: 1:100

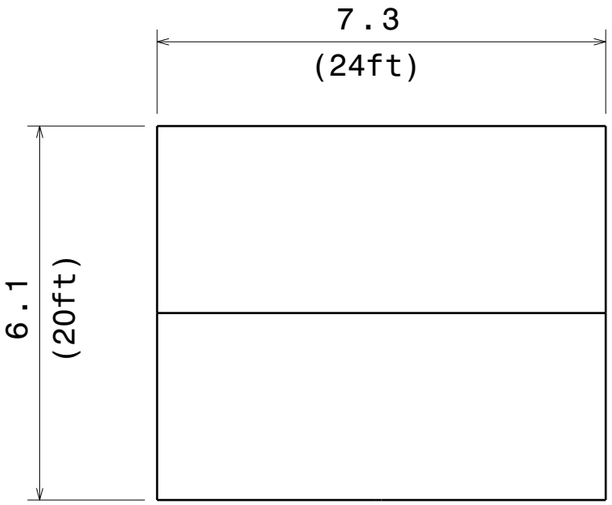

Top view
Scale: 1:100

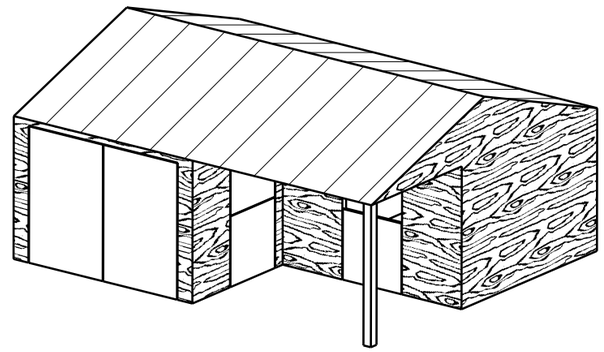

Isometric view
Scale: 1:100

Mr George Grey
Erection of stables and storage barn, with hardstanding area, vehicular access, access track and associated engineering works and fencing.
Stable building elevations & Floorplan
Proposed development

Units: Metre

A3

DRAWN	DATE	REVISION	ISSUE
G Grey	21/07/20	Addition of stable elevations, existing site section & revised site entrance	02
G Grey	14/07/20	Original	01

IF IN DOUBT ASK

Drawing Number 1

Page 6/7

This drawing and copyright thereof are the property of George Grey
They must not be reproduced in part or whole or passed on to others without permission

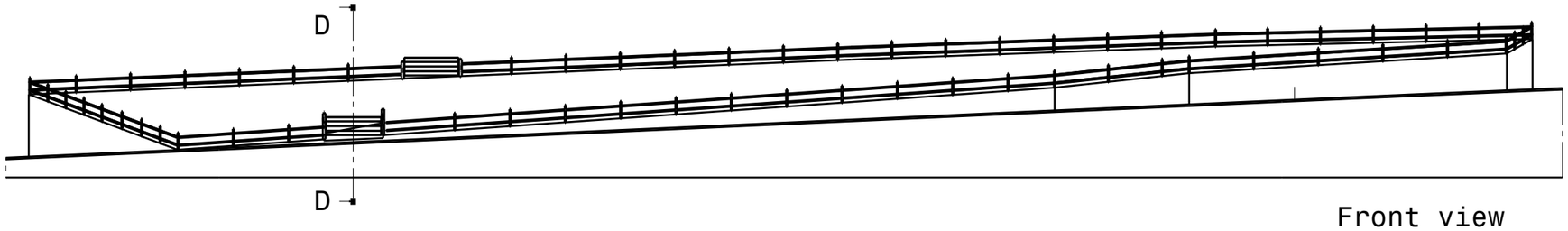

Front view
Scale: 1:400

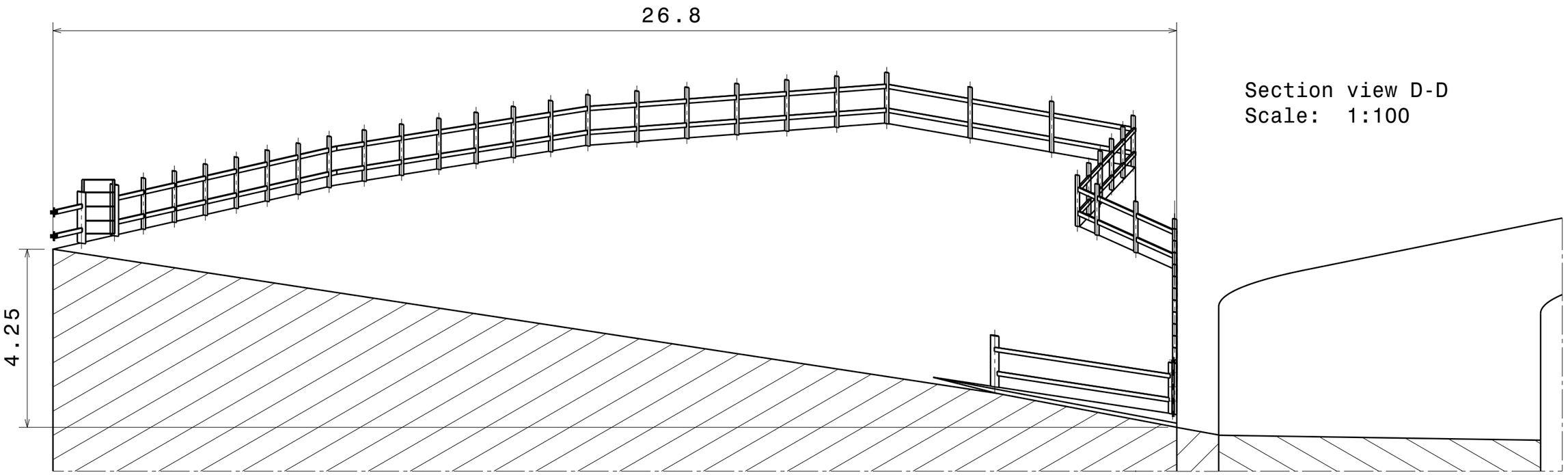

Section view D-D
Scale: 1:100

Mr George Grey
Erection of stables and storage barn, with hardstanding area, vehicular access, access track and associated engineering works and fencing.
Existing land section
Proposed development

Units: Metre

A3

G Grey	21/07/20	Addition of stable elevations, existing site section & revised site entrance	02	
G Grey	14/07/20	Original	01	Page
DRAWN	DATE	REVISION	ISSUE	7/7
IF IN DOUBT ASK			Drawing Number 1	

This drawing and copyright thereof are the property of George Grey
They must not be reproduced in part or whole or passed on to others without permission


N