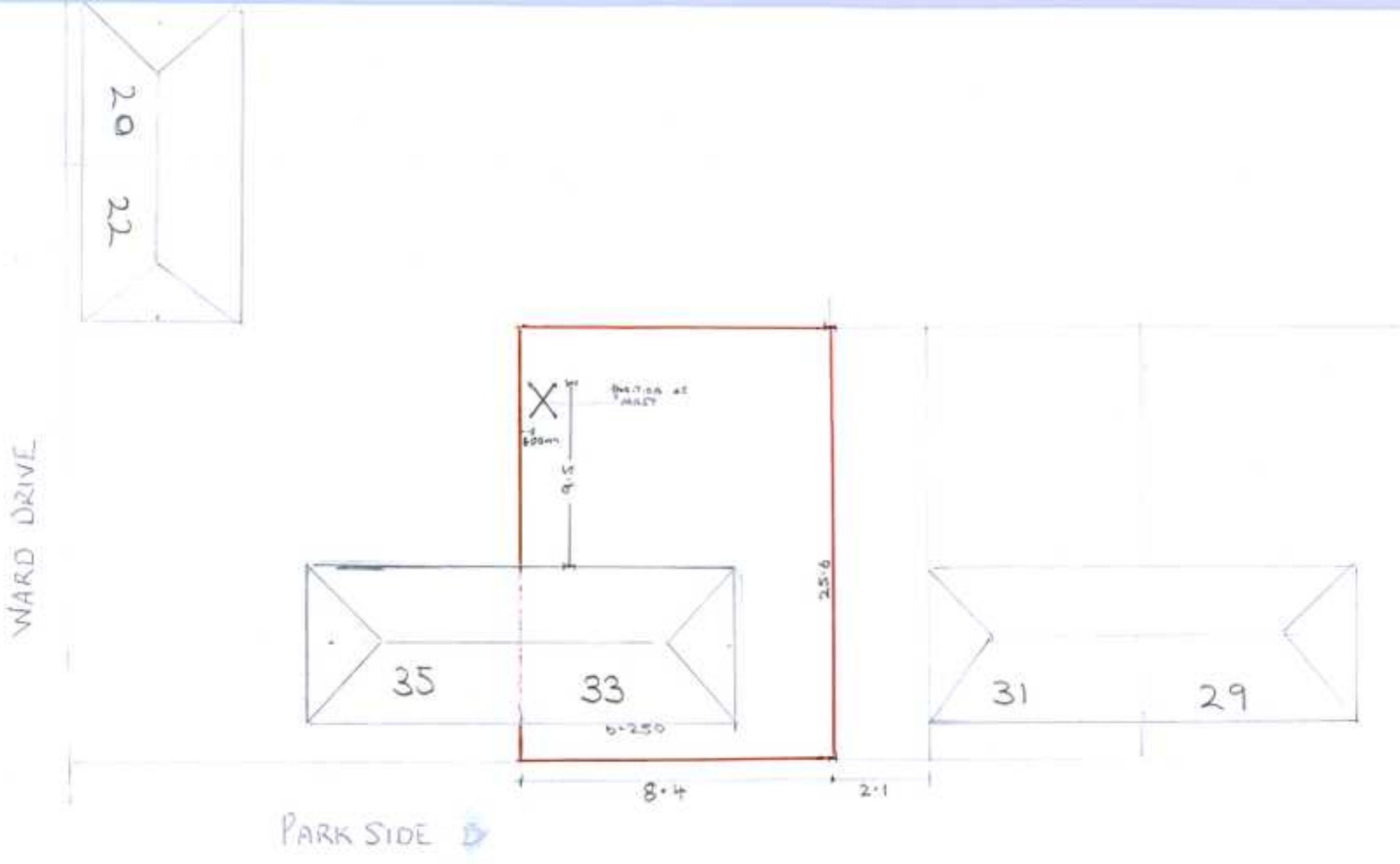
29
22
WARD DRIVE
35
33
31
29
25·6
6·250
8·4
2·1
PARK SIDE