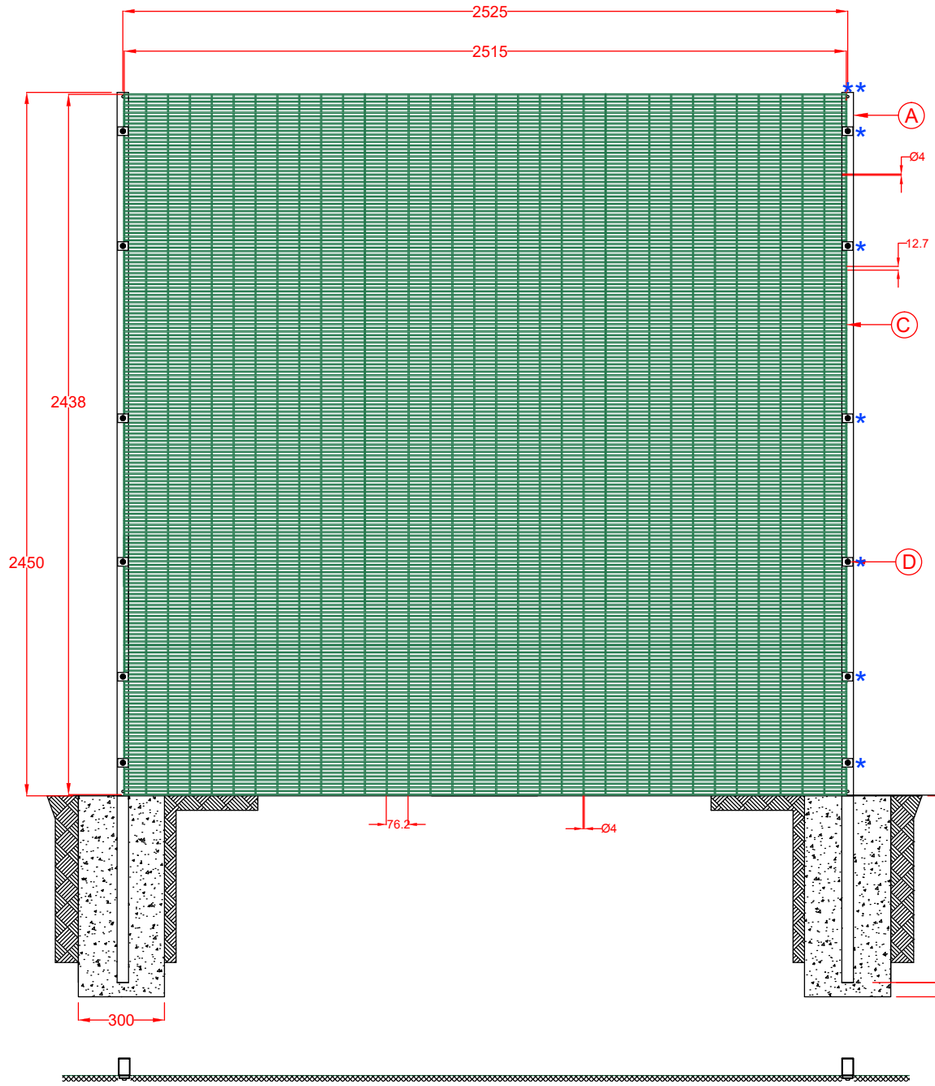

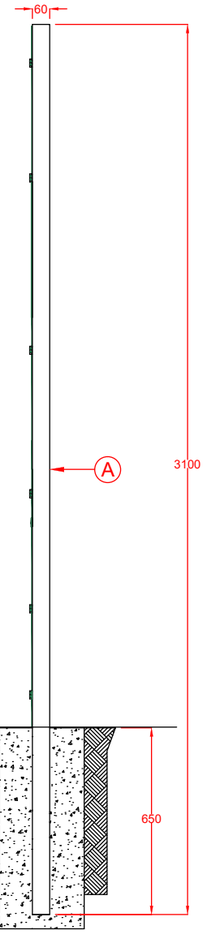

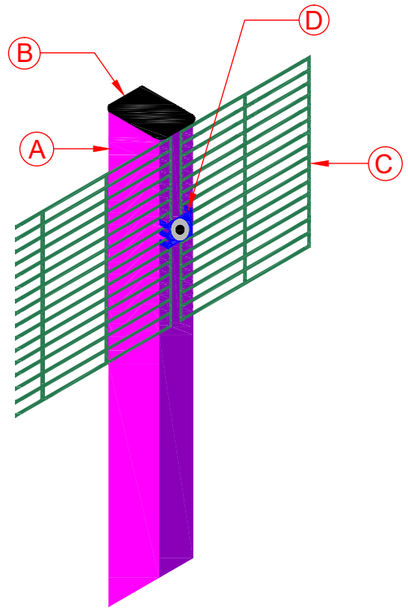

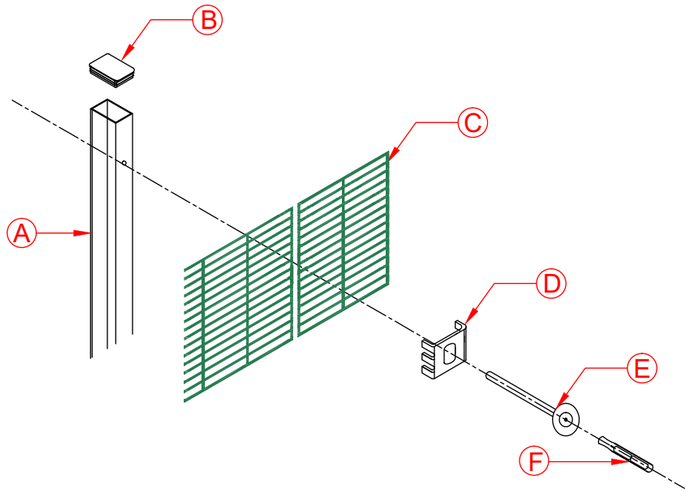

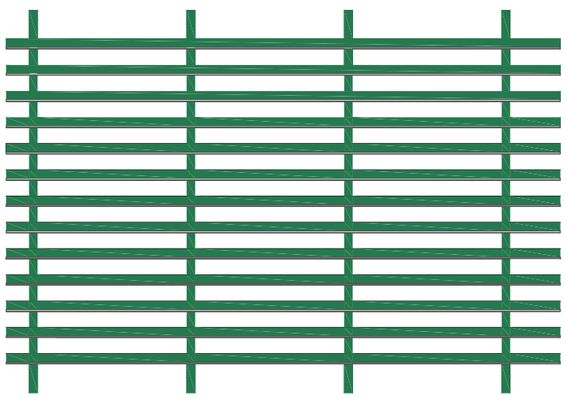

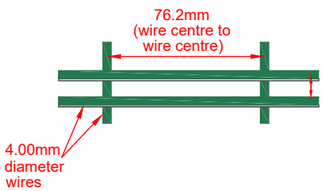

Parts	Component	Qty	Dimensions
A	Post *	1	3100x60x40
B	Post Caps *	1	60x40x20
C	358 Prison Mesh Panel	1	2438x2515
D	Fixing Clips *	6	
E	Security Bolt *	6	M8 X 40mm
F	Torque Bit *	1	

* ITEMS NOT INCLUDED AS PART OF SALEABLE KIT. ITEMS INCLUDED WITH SALEABLE KIT ARE INDICATED IN COMPONENT BOX ABOVE. DRAWING FOR ILLUSTRATION PURPOSES ONLY.

DRAWING NO: 820

TITLE: 2400MM HIGH 358 PRISON MESH FENCING

DRAWN BY: SATYA

DATE: 09/07/2015

SCALE: 420X297@A3

ALL DIMENSIONS ARE IN MM

SHEET: 20

FirstFence
Kiln Way, Swadlincote, Derbyshire, DE11 8EA
Tel: 01283 512 111 Fax: 01283 480 552
sales@firstfence.co.uk www.firstfence.co.uk

NOTE:
- THIS DRAWING IS NOT TO BE SCALED - FIGURED DIMENSIONS ONLY TO BE TAKEN
- SHOULD ANY DISCREPANCIES BE FOUND WITH THIS DRAWING, PLEASE INFORM FIRST FENCE
- COPYRIGHT OF THIS DRAWING IS OWNED BY FIRST FENCE LIMITED