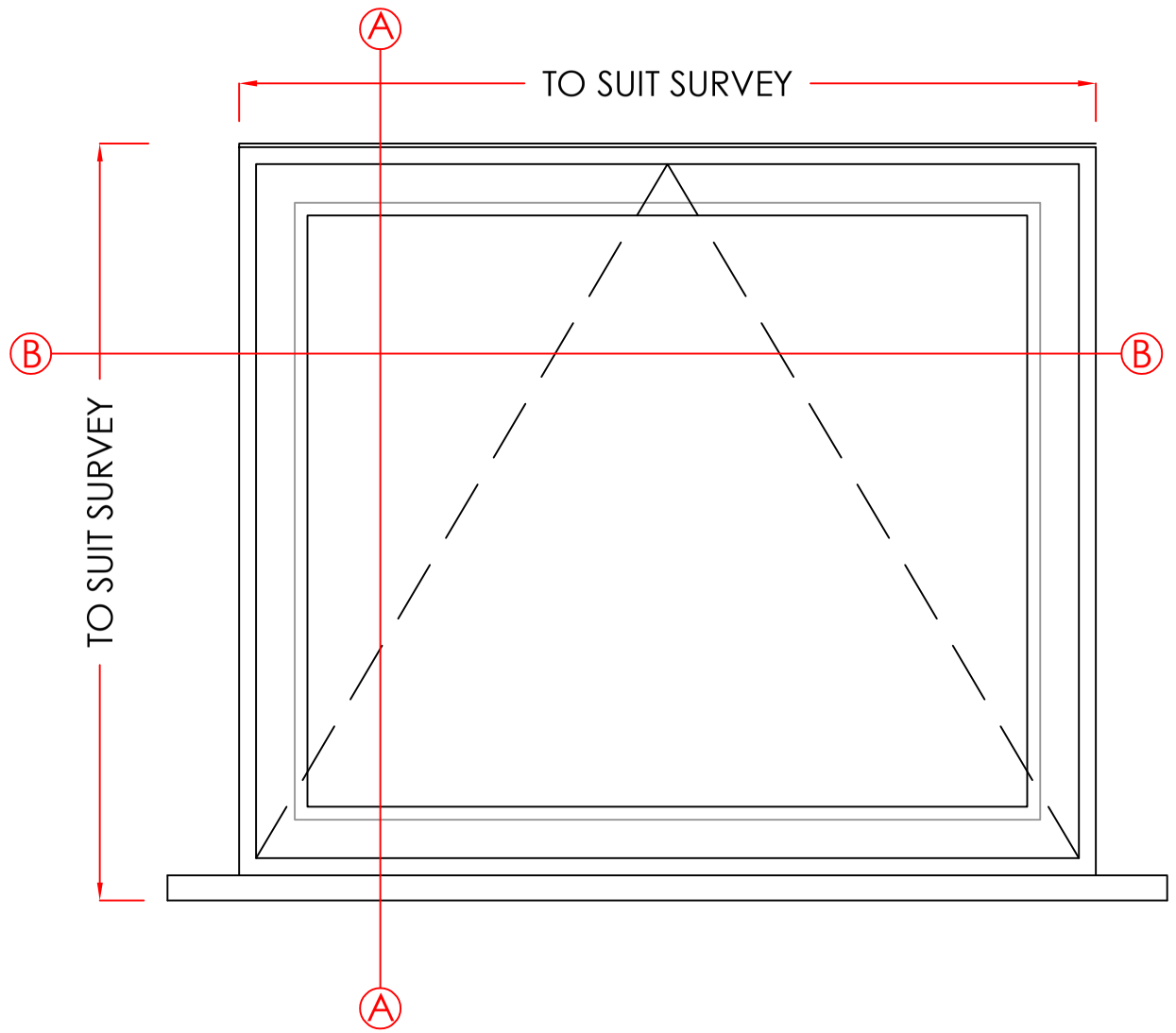

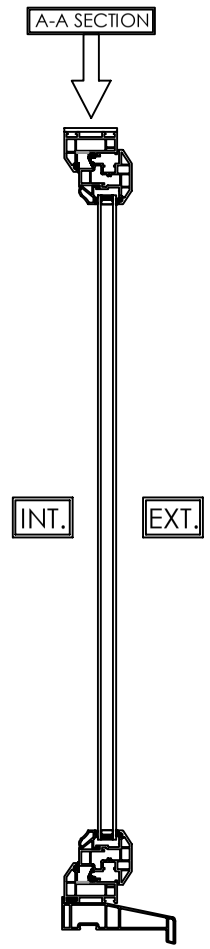

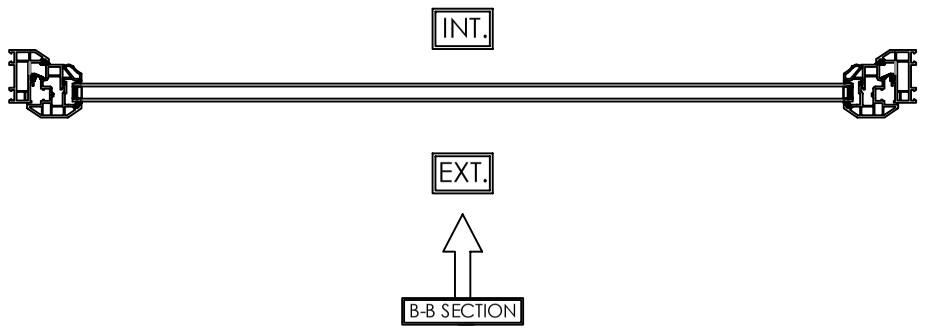

ITEM 14

MATERIAL - PVCu
EXTERNAL COLOUR - SAGE GREEN
INTERNAL COLOUR - WHITE
GLAZING - 24MM SEALED UNITS

VIEWED EXTERNALLY

THESE DRAWINGS ARE THE PROPERTY OF ANGLIAN HOME IMPROVEMENTS AND MUST NOT BE USED, DISTRIBUTED, LOANED OR COPIED WITHOUT THE EXPRESS PERMISSION OF ANGLIAN HOME IMPROVEMENTS.

Scale Bar 1:10 (mm)

0 100 200 300 400 500 600 700 800 900 1000 1100 1200 1300 1400 1500

Scale - 1:10
(Produced on A3 Paper)

Sheet 7 Of 7

Drawers Initials: SF

CONTRACT No.: 30287475 **date:** 27/07/2020

PROPOSED: WINDOW REPLACEMENT
AT: (INSTALLATION ADDRESS)
CHEVIN BRAE, CHEVIN ROAD
MILFORD
BELPER
DERBYSHIRE, DE56 0QH

MR D MORETON

Anglian Home Improvements