©2014 Do not scale from this drawing. All dimensions to be checked on site by contractor/ manufacturer prior to construction and any discrepancies reported to Vertical Edge Design. Approval from Vertical Edge Design must be obtained prior to duplication or reproduction of the drawing or its contents. All rights reserved.

0 10mm
Actual Size.

Materials

Roof - Interlocking flat profiled concrete roof tiles - grey.

Brickwork - stone effect some feature render panels

Windows / doors - White UPVC

Rain water goods - White UPVC

Verge / eaves - White UPVC



FRONT REAR SIDE SIDE

ELEVATIONS
SCALE 1:100

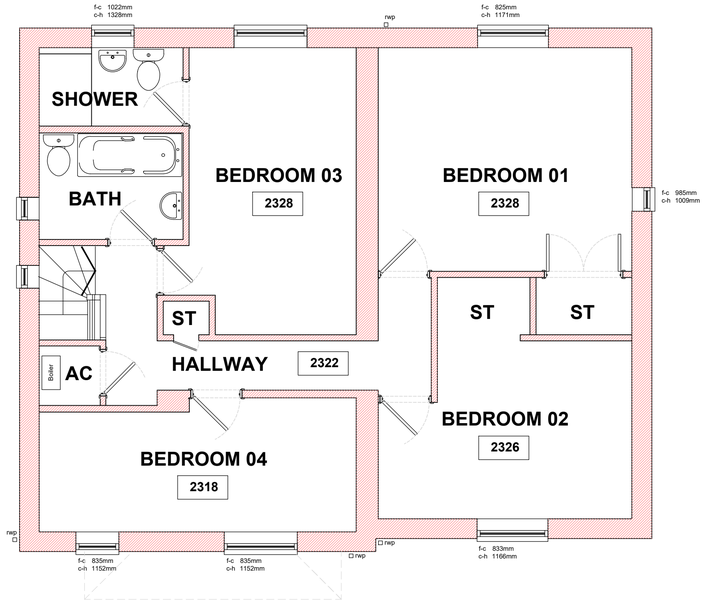

FIRST FLOOR PLAN
SCALE 1:50

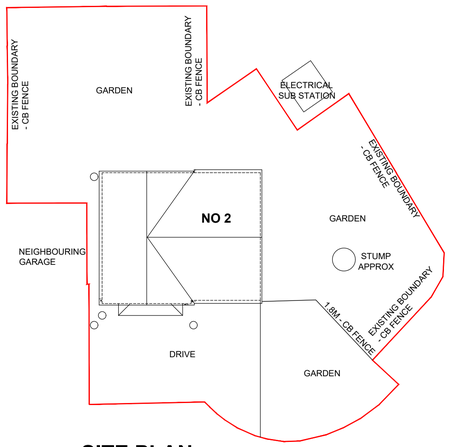

SITE PLAN
SCALE 1:200

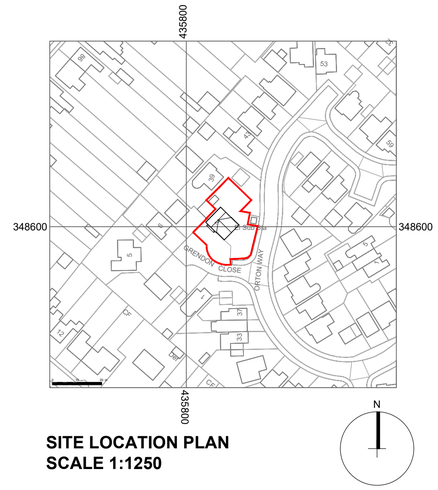

SITE LOCATION PLAN
SCALE 1:1250

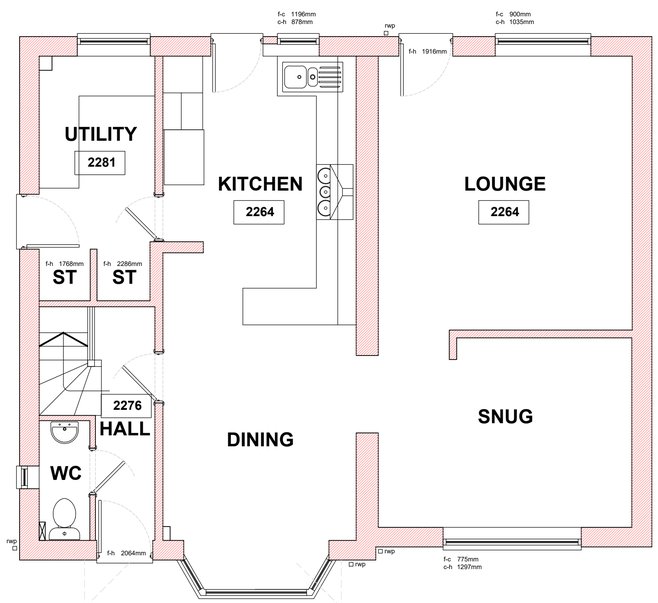

GROUND FLOOR PLAN
SCALE 1:50

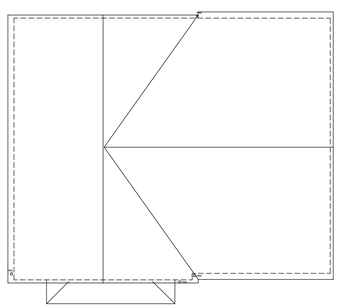

ROOF PLAN
SCALE 1:100

SCALE 1 : 50 0m 0.5m 1m 2m 3m 4m 5m
SCALE 1 : 1 0m 10mm 20mm 40mm 60mm 80mm 100mm

SCALE 1 : 100 0m 1m 2m 4m 6m 8m 10m
SCALE 1 : 1 0m 10mm 20mm 40mm 60mm 80mm 100mm

SCALE 1 : 1250 0m 10m 20m 40m 60m 80m 100m 120m
SCALE 1 : 1 0m 8mm 16mm 40mm 56mm 80mm 100mm

rev:	date:	description:	by:

VERTICALEDGE DESIGN

CLIENT
Mr & Mrs Kirkup

ADDRESS
2 Grendon Close
Belper
DE56 1UE

DRAWING
Plans, Elevations, Roof & Site - As Existing

STATUS
GENERAL ISSUE

DATE December 2019 SCALE as shown at A1

JOB No	DRAWING No	REVISION
VED596	01	-

Vertical Edge Design
1 Lea View
Rainworth
Nottinghamshire
NG21 0NH
m: 07853 270155
e: info@verticaledgedesign.co.uk
www.verticaledgedesign.co.uk