Internally Glazed Casement

(reinforcement shown for reference only)

refer to reinforcement guides for more information

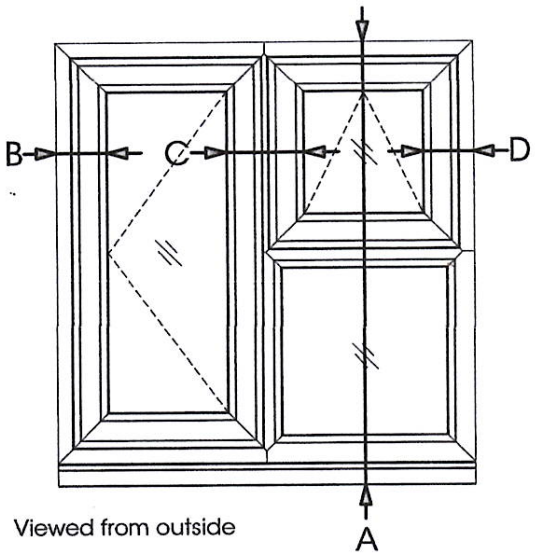

Viewed from outside

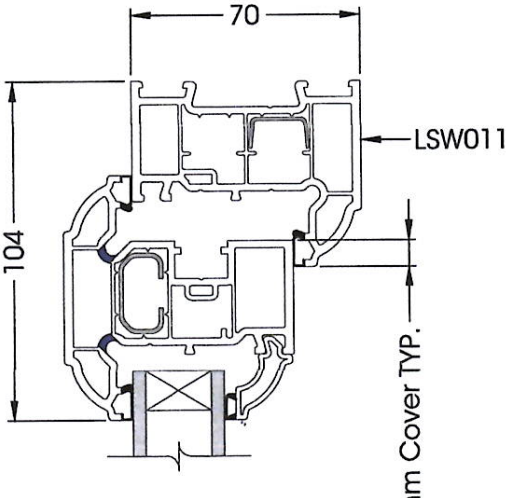

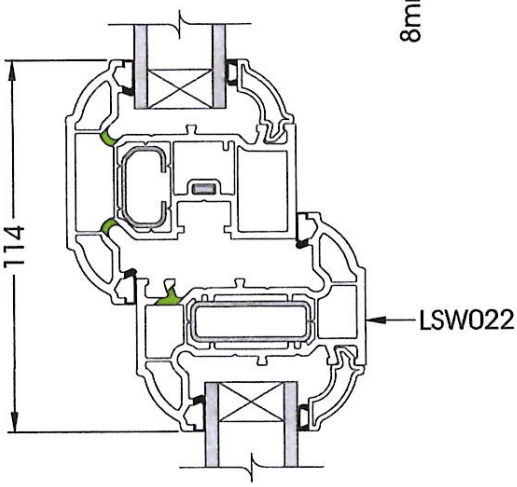

Section B

Scale 1:2

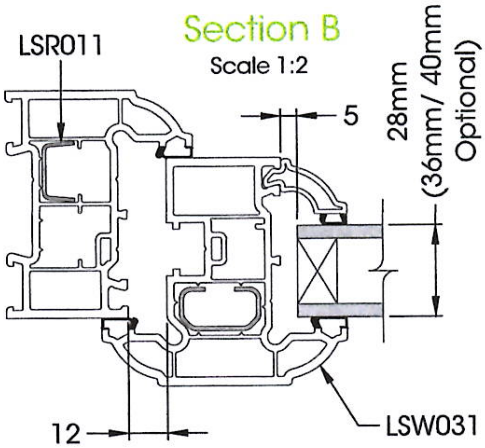

Section D

Scale 1:2

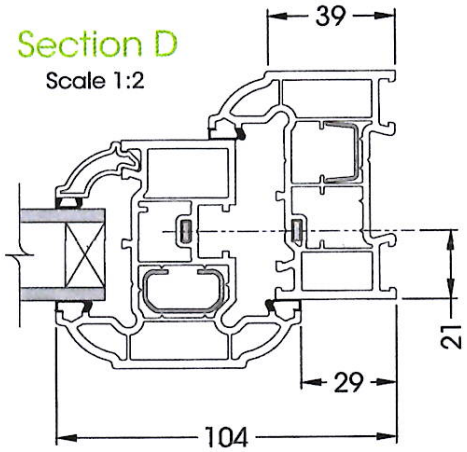

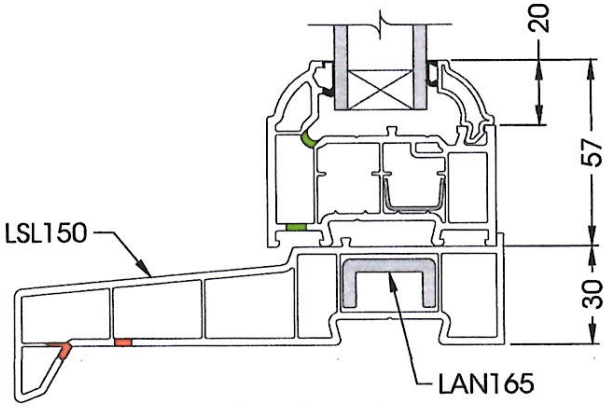

Section A

Scale 1:2

Drainage Slot Typically 30mm x 5mm wide.

Pressure Equalization Typically 30mm x 5mm wide.

Cill Venting Denoted in Orange.

Internally Glazed Tilt & Turn

(reinforcement shown for reference only)
refer to reinforcement guides for more information

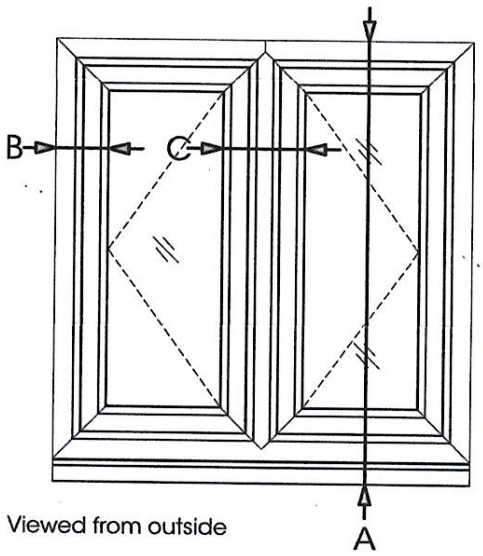

Viewed from outside

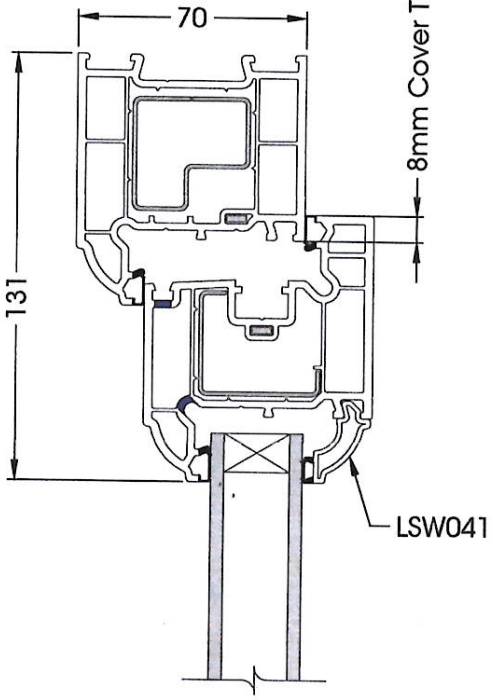

Section B

Scale 1:2

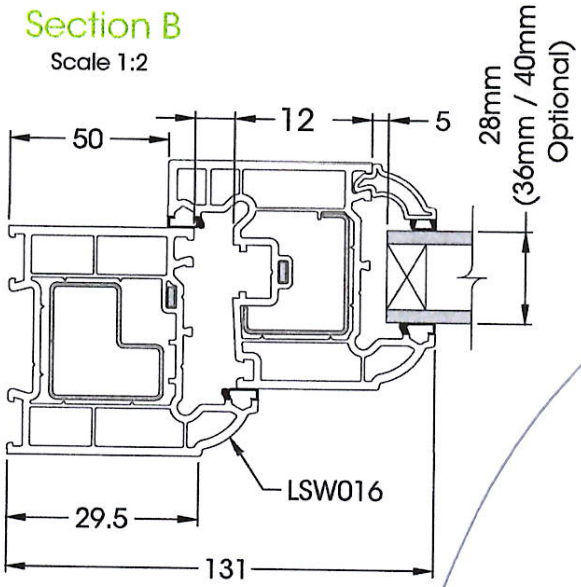

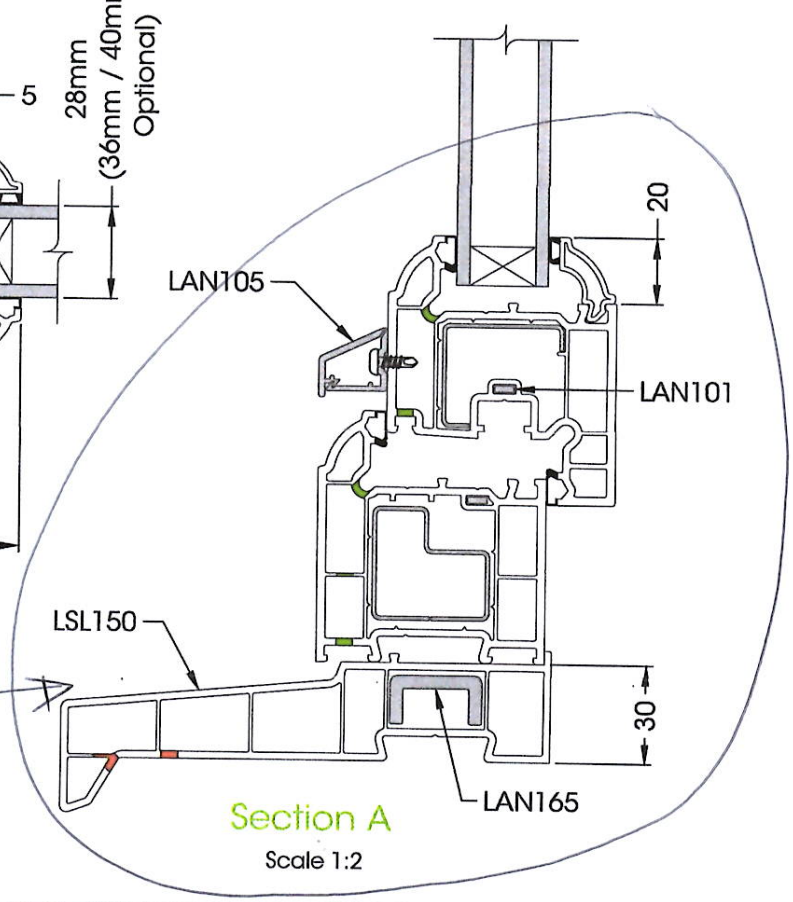

Section A

Scale 1:2

* FOR BEDROOM FIRE ESCAPES BOTTOM HALF.

Drainage Slot Typically 30mm x 5mm wide.
Pressure Equalization Typically 30mm x 5mm wide.
Cill Venting Denoted in Orange.

LK001 & LK002, Mock Sash Horn Kit

Sculptured Chamfered

Mech. Joint Assy. (Recommended)

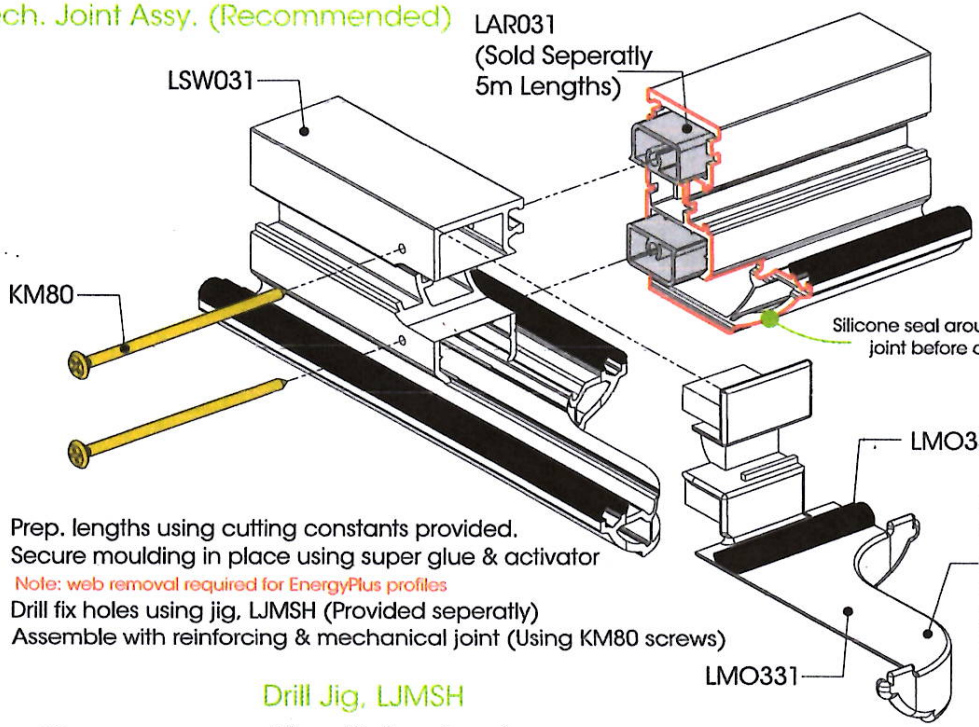

- Prep. lengths using cutting constants provided.
- Secure moulding in place using super glue & activator
  Note: web removal required for EnergyPlus profiles
- Drill fix holes using jig, LJMSH (Provided seperatly)
- Assemble with reinforcing & mechanical joint (Using KM80 screws)

Same end cap used for both sculptured and chamfered mock sash horn kits.

Drill Jig, LJMSH

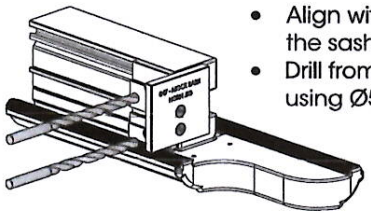

- Align with the edge of the sash
- Drill from inside face using Ø5 drill

Cutting Constants

Mech. Joint

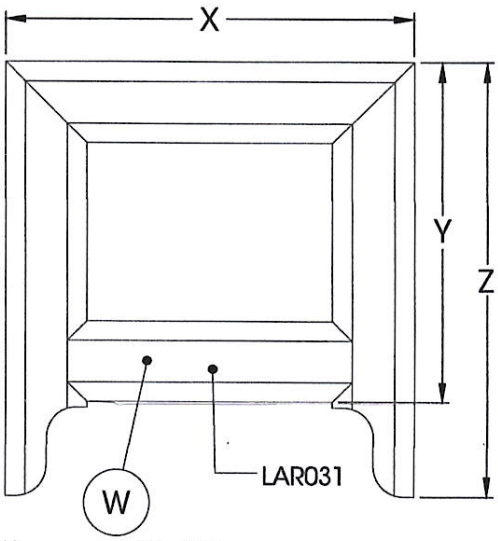

W = W - 104
Z = Y + 86.5 + 2.5 Weld Allowance
LAR031 = 4x100mm
X & Y - Finished sizes of sash

Welding Assembly

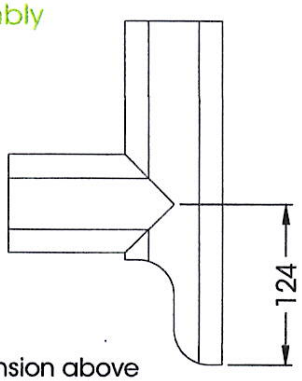

- V-Notch at dimension above
- Weld sash(s) together
- Secure moulding in place using super glue & activator

Cutting Constants

- 1st cut of bottom rail = Top rail size

Internally Glazed
French Door

(reinforcement shown for reference only)
refer to reinforcement guides for more information

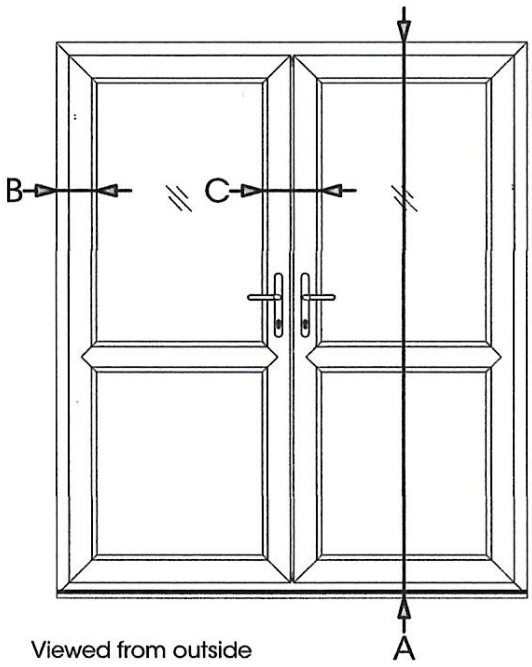

Viewed from outside

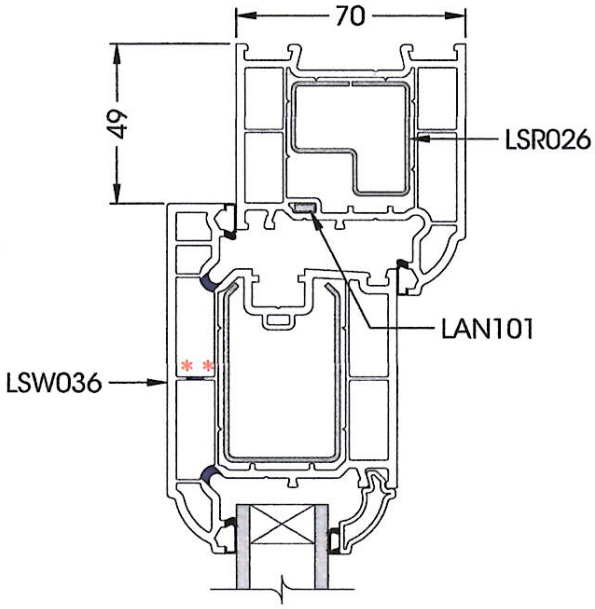

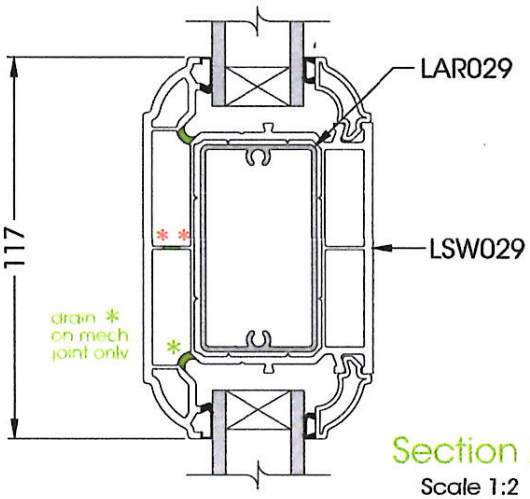

Section A
Scale 1:2

Section B
Scale 1:2

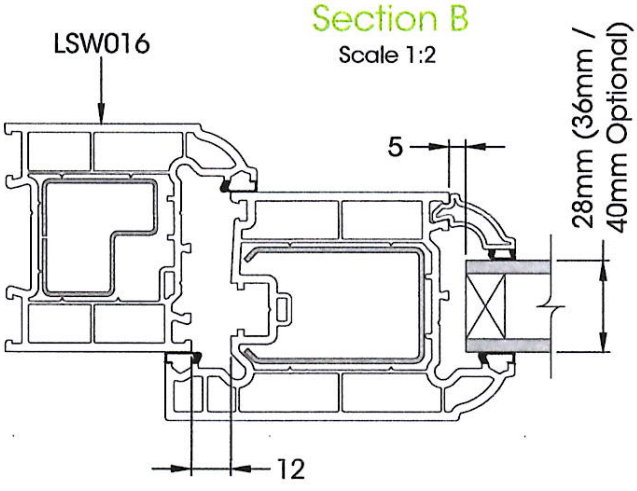

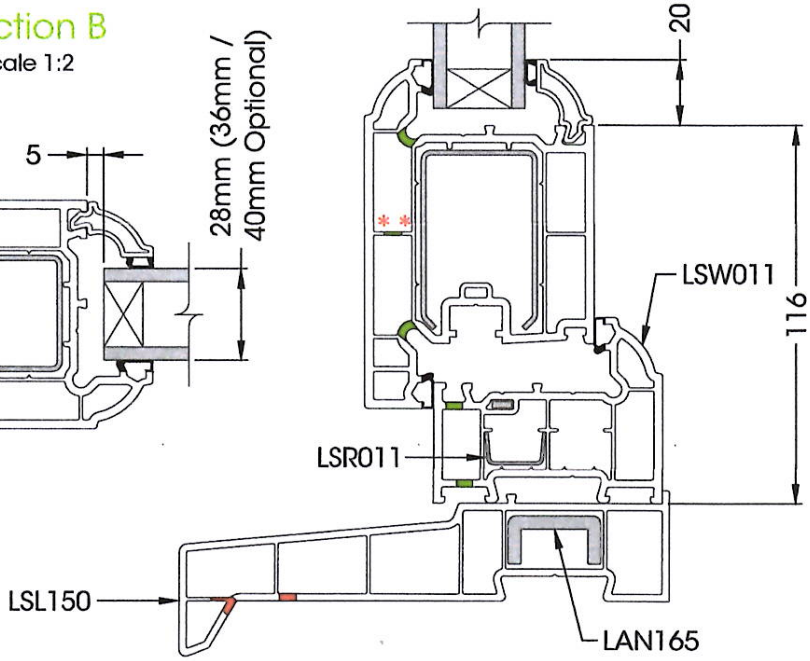

Drainage Slot Typically 30mm x 5mm wide
Pressure Equalization Typically 30mm x 5mm wide.
** Remove web each end 5mm deep before welding
Cill Venting Denoted in Orange.