WINDOW JAMB DETAIL

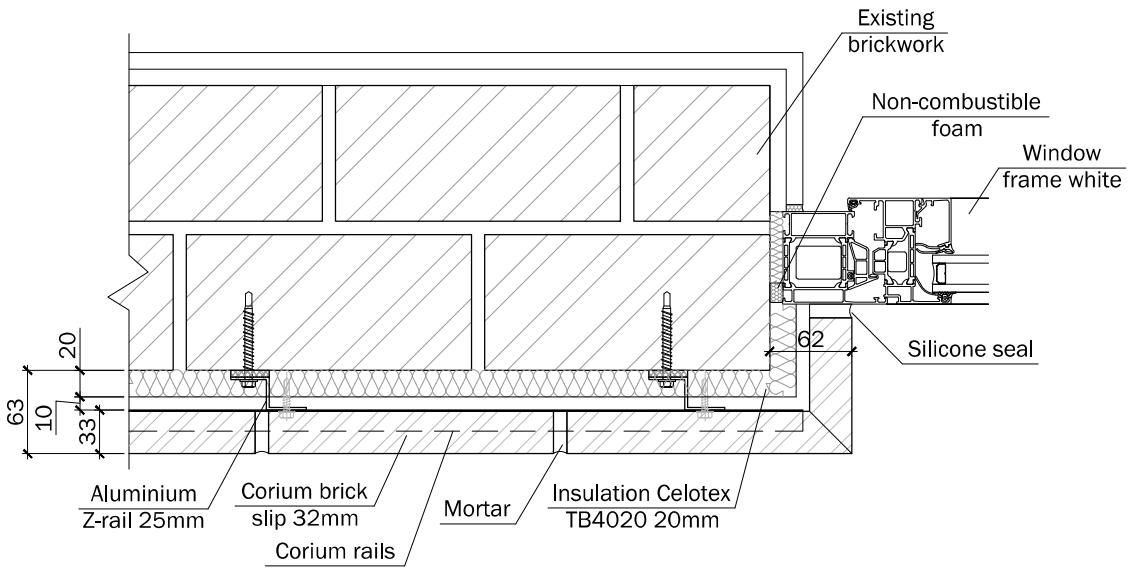

WINDOW HEAD DETAIL

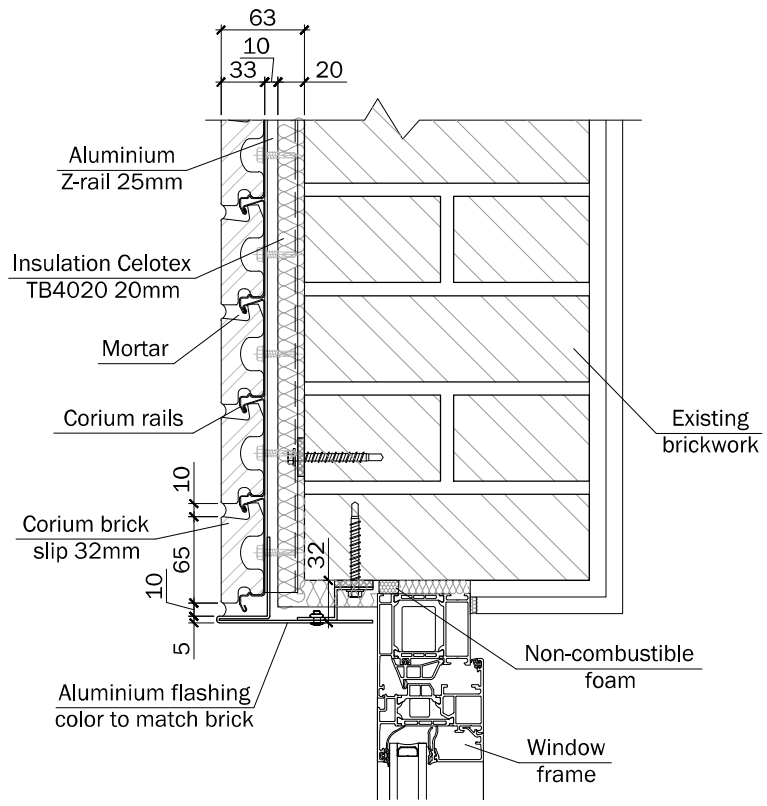

P1	Issued for approval	11.09.20	DB	JA
Rev No	Revision note	Date	Drawn	Checked

Client

Drawn By
PAV FIXERS LTD

Project
ALANDALE ROAD 1

Drawing
WINDOW REVEAL DETAILS

Drawn By
PK

Status
For approval

Scale
1:5 A3

Date
11.09.20

DWG No
20-112

Rev
P1