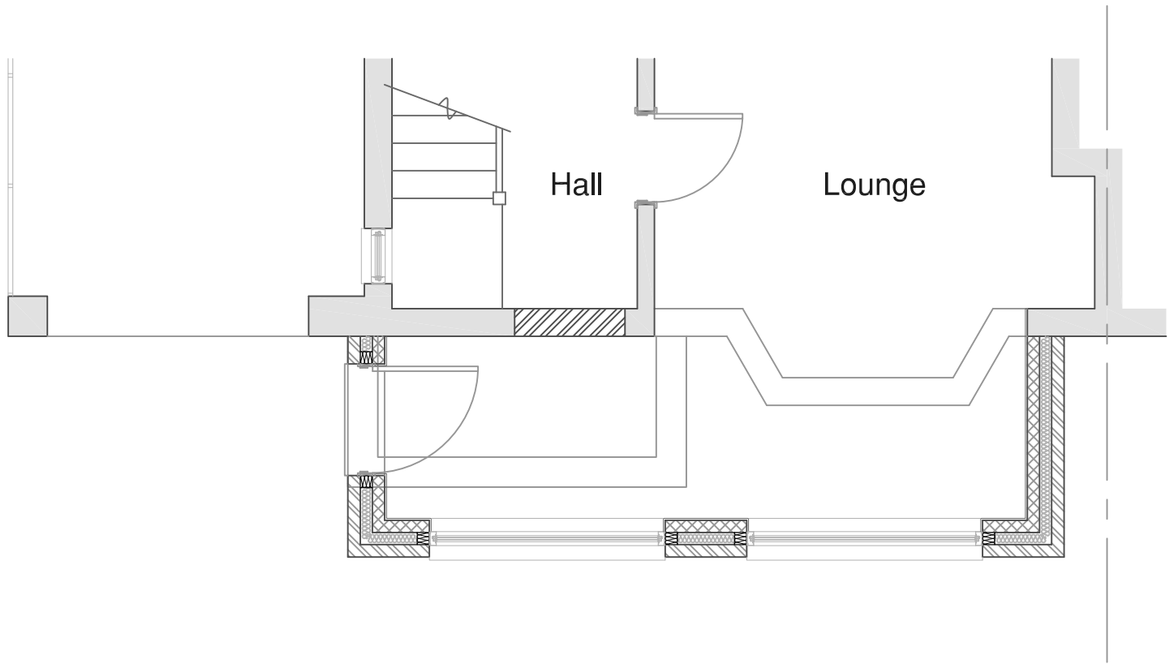

Ground Floor Layout (AS PROPOSED)



Front Elevation
(AS PROPOSED)

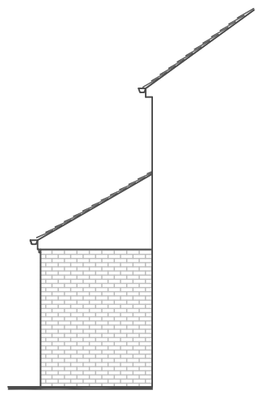

R.H.S Elevation
(AS PROPOSED)

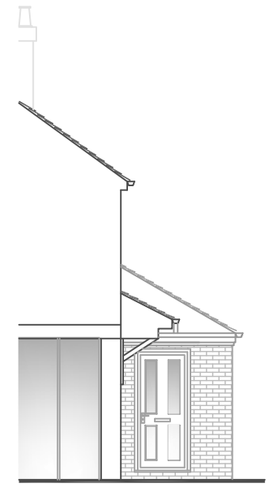

L.H.S Elevation
(AS PROPOSED)

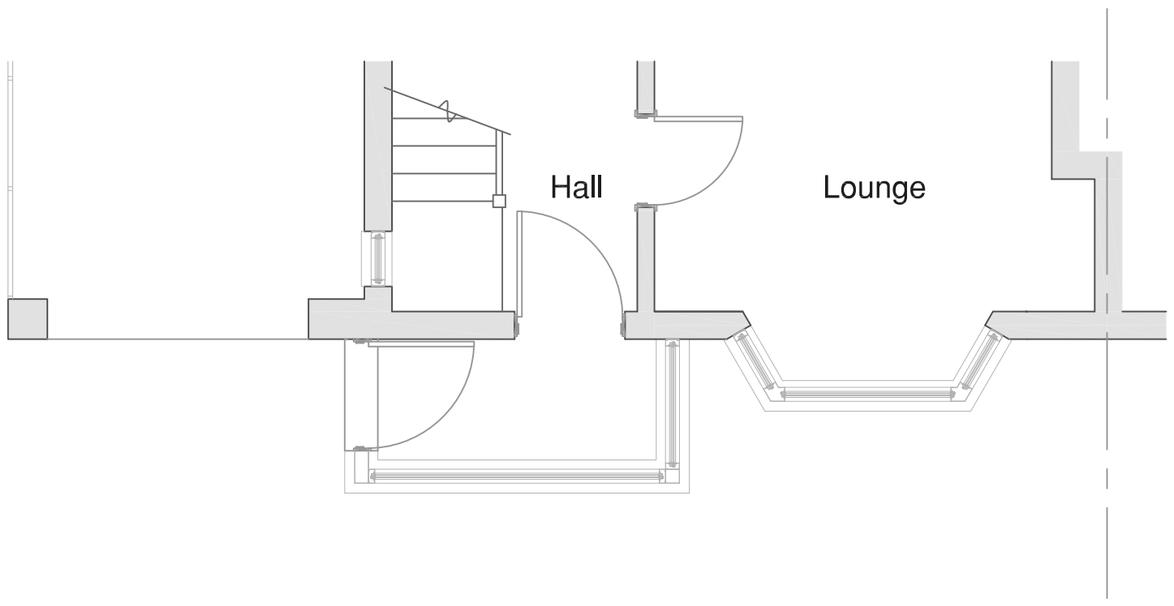

Ground Floor Layout (AS EXISTING)



Front Elevation
(AS EXISTING)

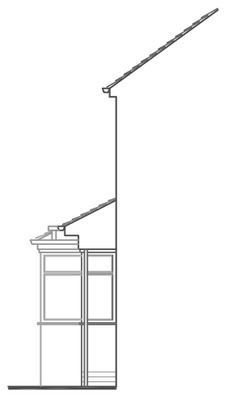

R.H.S Elevation
(AS EXISTING)

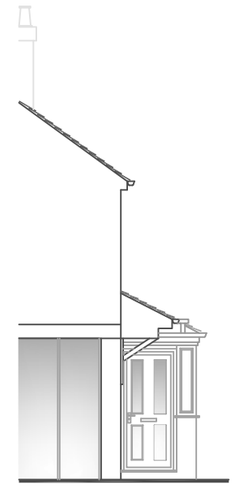

L.H.S Elevation
(AS EXISTING)



Block Plan (Scale 1:500)

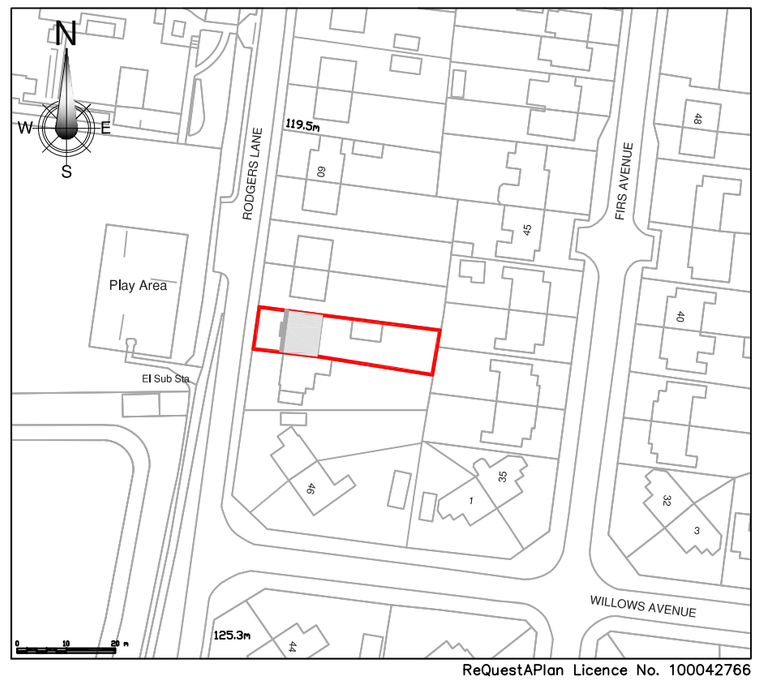

Location Plan (Scale 1:1250)

© copyright

NOTES

1. No dimensions to be scaled from this drawing.
2. This drawing is to be read in conjunction with all relevant Architect's and Engineer's drawings.

Rev.	Date	Amendments	Initials

MR. & MRS. J. SLUDDS

Project

Proposed Extension & Alterations
52, Rodgers Lane,
Alfreton,
Derbyshire.

Drawing Title

LAYOUTS AND ELEVATIONS AS EXISTING AND PROPOSED.

H M CHAMBERS & PARTNERS
consulting civil and structural engineers

41a Derby Road , Heanor
Derbyshire. DE75 7QG
Telephone [01773] 718994

ace consultancy engineering business environment

Date	Drawing No.
August 2020	N7824-01
Scale 1:50, 1:100 @ A2	