©2014 Do not scale from this drawing. All dimensions to be checked on site by contractor/ manufacturer prior to construction and any discrepancies reported to Vertical Edge Design. Approval from Vertical Edge Design must be obtained prior to duplication or reproduction of the drawing or its contents. All rights reserved.

0 10mm
Actual Size.

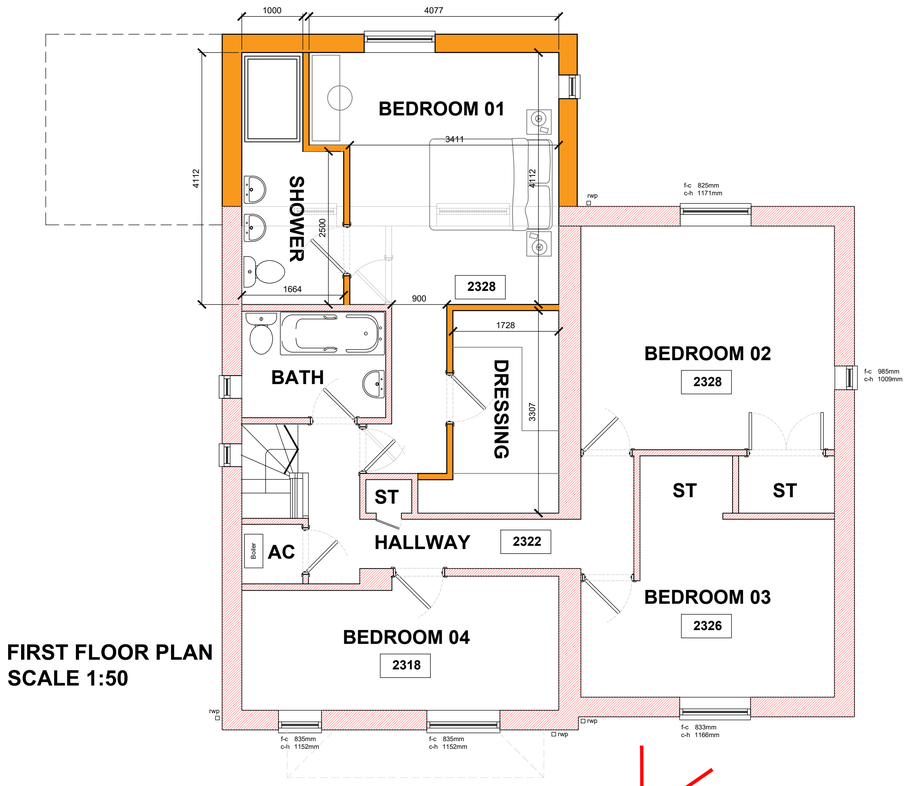

FIRST FLOOR PLAN
SCALE 1:50

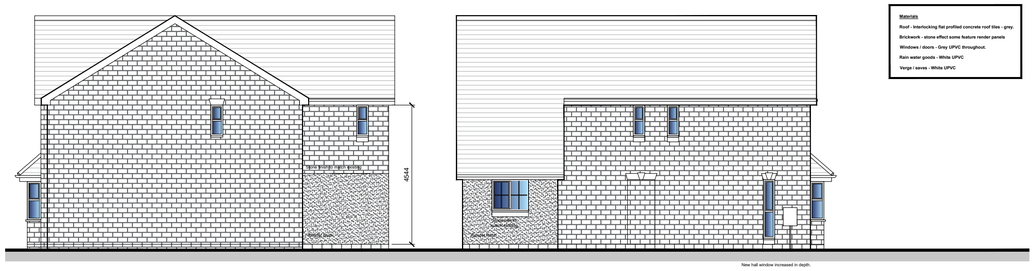



FRONT

REAR

ELEVATIONS
SCALE 1:100

Materials

Roof - Interlocking flat profiled concrete roof tiles - grey.
Brickwork - stone effect some feature render panels
Windows / doors - Grey UPVC throughout.
Rain water goods - White UPVC
Verge / eaves - White UPVC

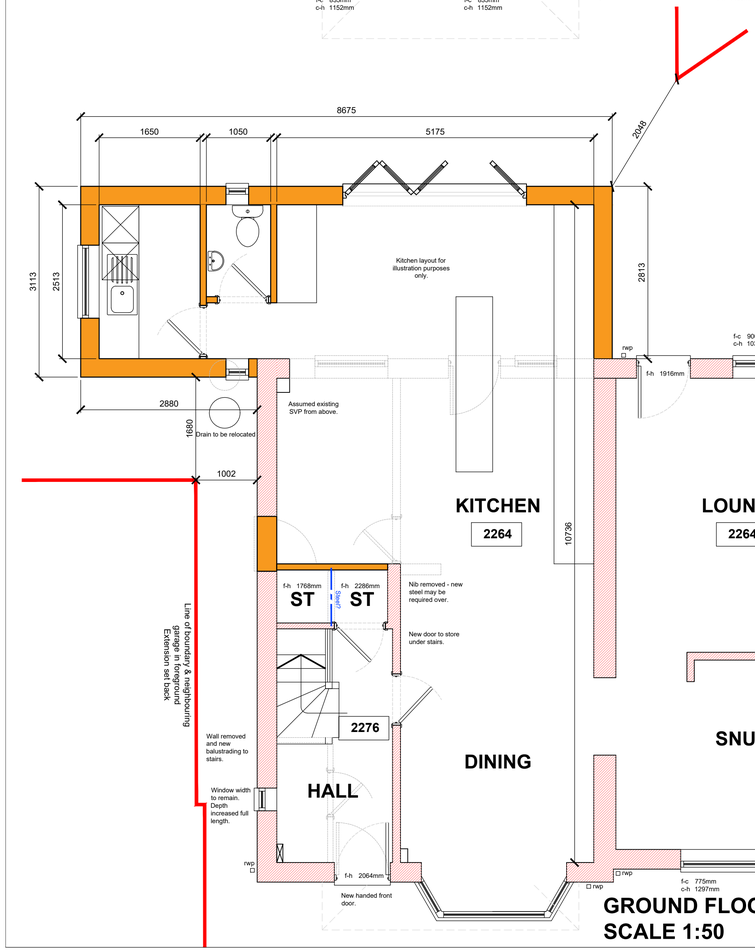

GROUND FLOOR PLAN
SCALE 1:50

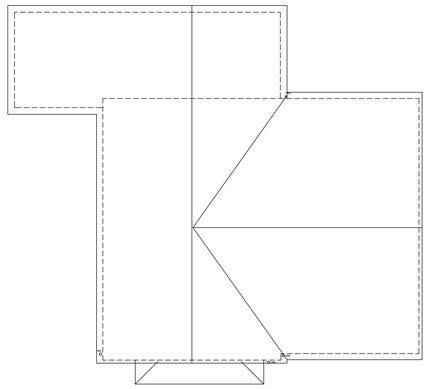

ROOF PLAN
SCALE 1:100

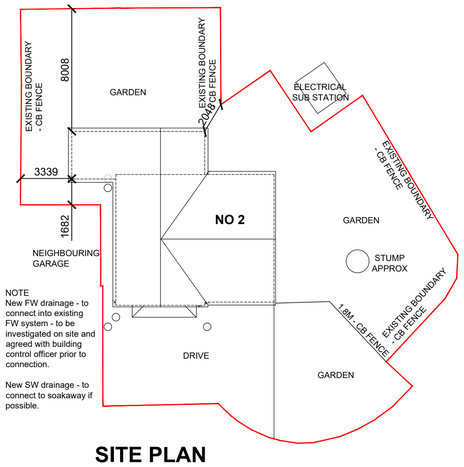

NOTE
New FW drainage - to connect into existing FW system - to be investigated on site and agreed with building control officer prior to connection.

New SW drainage - to connect to soakaway if possible.

SITE PLAN
SCALE 1:200

rev:	date:	description:	by:
C	18.09.20	Hall window to match plan description and increased in depth on elevation. Utility window added to elevation as per plan.	rcw
B	04.08.20	Planning Application	rcw
A	21.07.20	Store under stair accessed from Hall. Remove window to utility. remove existing door to side elevation.	rcw

VERTICAL EDGE DESIGN

CLIENT
Mr & Mrs Kirkup

ADDRESS
2 Grendon Close
Belper
DE56 1UE

DRAWING
Plans, Elevations, Roof & Site - As Proposed

STATUS
PLANNING APPLICATION

DATE July 2020 SCALE as shown at A1

JOB No	DRAWING No	REVISION
VED596	03	C

Vertical Edge Design
1 Lea View
Rainworth
Nottinghamshire
NG21 0NH
m: 07853 270155
e: info@verticaledgedesign.co.uk
www.verticaledgedesign.co.uk

SCALE 1 : 50 0m 0.5m 1m 2m 3m 4m 5m
SCALE 1 : 1 0m 10mm 20mm 40mm 60mm 80mm 100mm

SCALE 1 : 100 0m 1m 2m 4m 6m 8m 10m
SCALE 1 : 1 0m 10mm 20mm 40mm 60mm 80mm 100mm

SCALE 1 : 1250 0m 10m 20m 40m 60m 80m 100m 120m
SCALE 1 : 1 0m 8mm 16mm 40mm 56mm 80mm 100mm