Hymor Timber Limited

Scotia Business Park • Scotia Road • Tunstall • Stoke-on-Trent • ST6 4HG
Telephone 01782 836636
Fax 01782 837353 • Email: enquiries@hymortimber.co.uk
www.hymortimber.co.uk

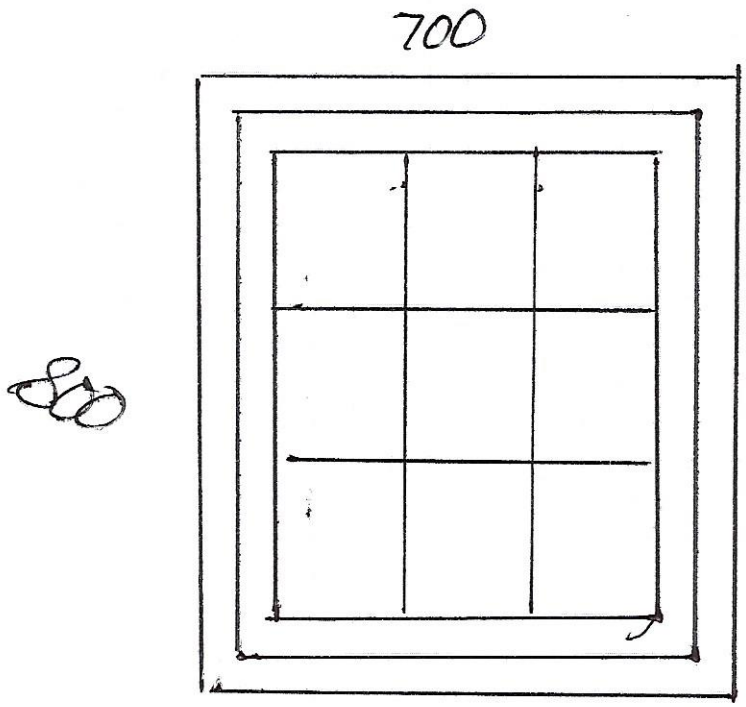

Window 3 x 8

Window 4

QUALITY HARDWOODS & SOFTWOODS
OAK BEAMS · SHEET MATERIALS
MACHINING SERVICES TO YOUR SPECIFICATION

FSC www.fsc.org FSC® C005489 The mark of responsible forestry

PEFC PEFC/16-37-661