MUMFORD & WOOD
EST. 1954

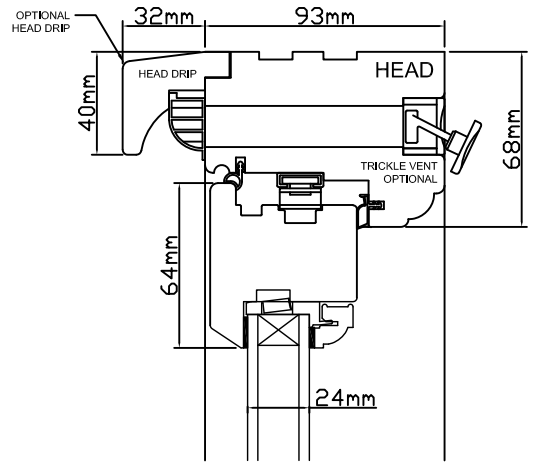

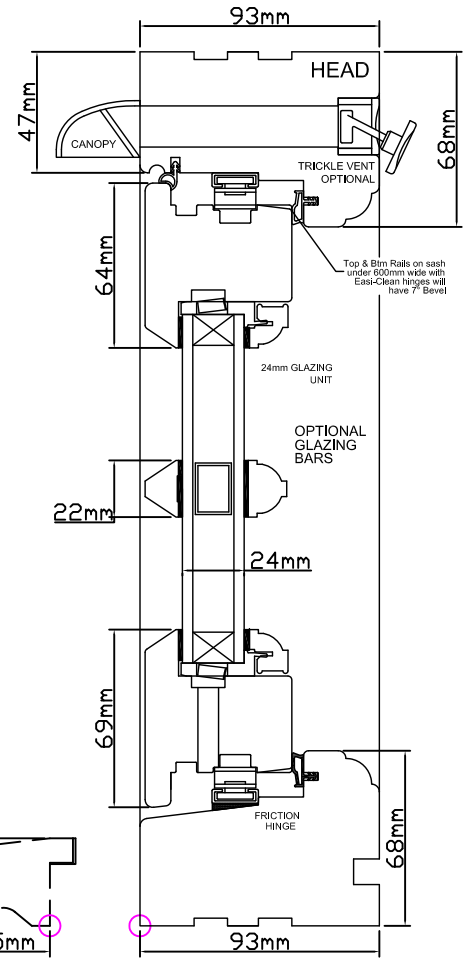

OPTIONAL PROFILES

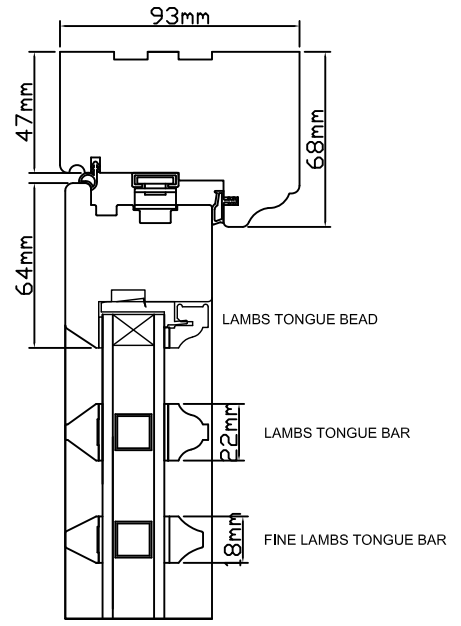

CILL EXTENSION OPTIONS

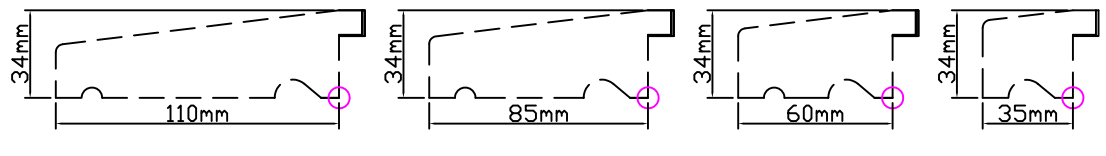

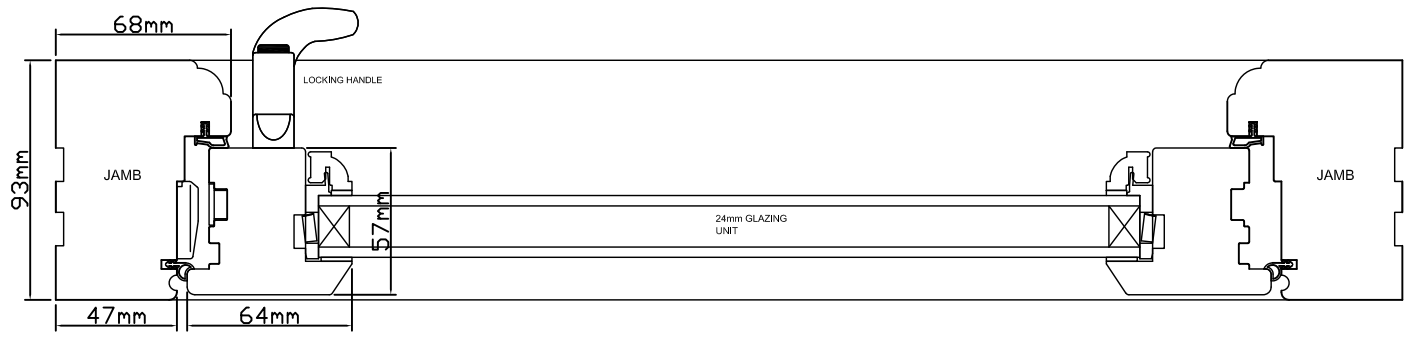

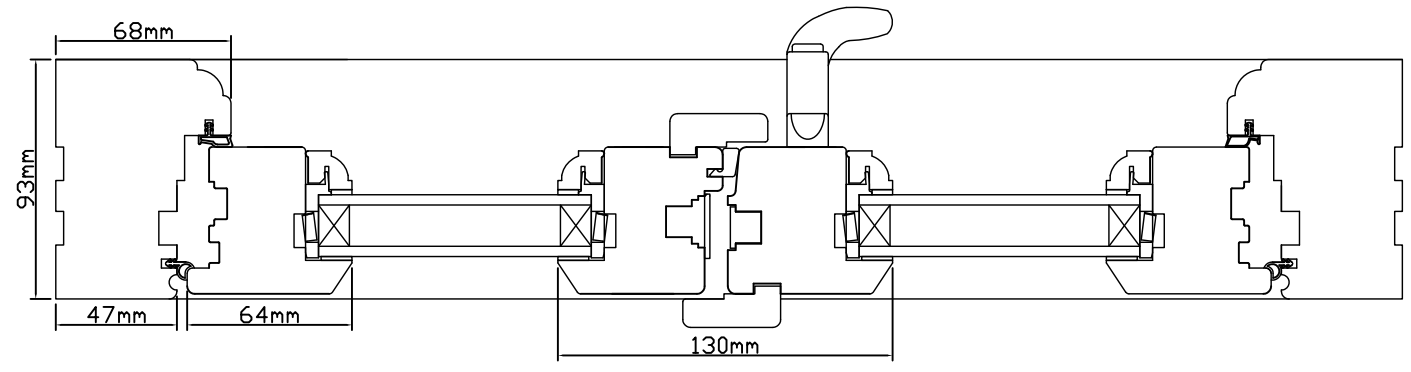

CONSERVATION CASEMENT WINDOW
HEAD,CILL, JAMB & TRICKLE VENT OPTIONS
U.K. PATENT GB2297344B & GB2283269B

www.mumfordwood.com