MUMFORD & WOOD
EST. 1954

TRICKLE VENT OPTIONS

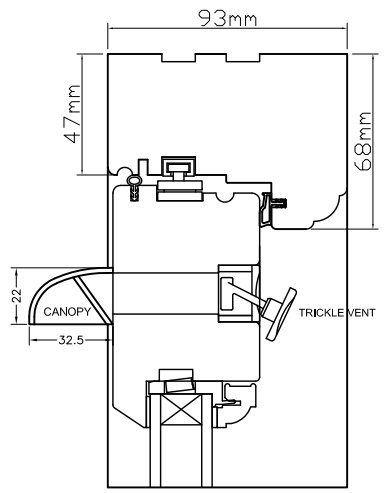

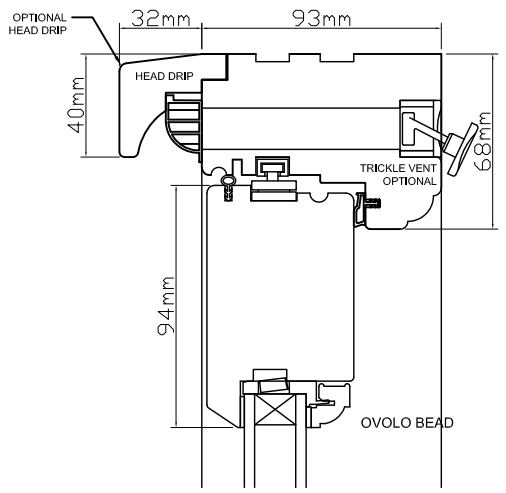

OPEN OUT with Timber Cill

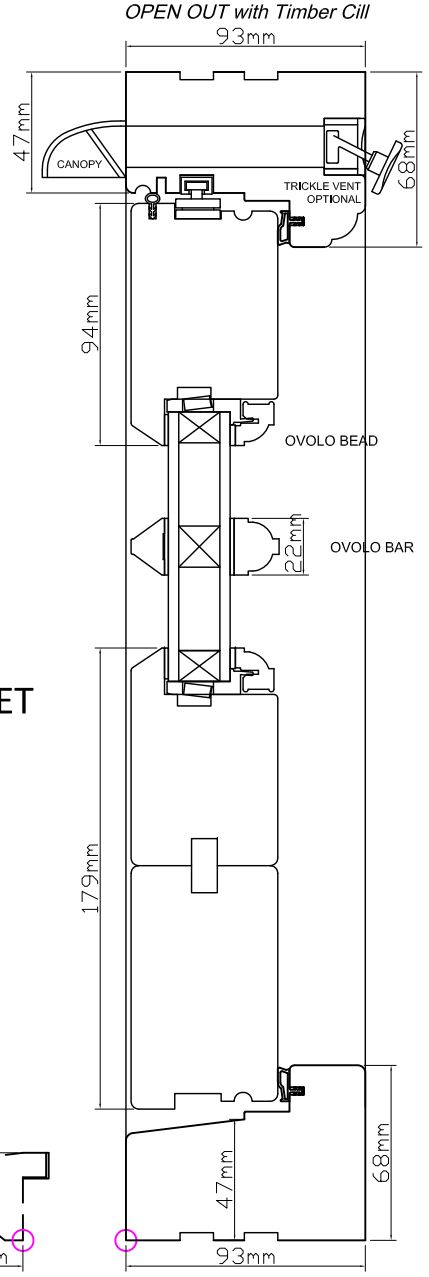

OPEN OUT with Mobility Cill

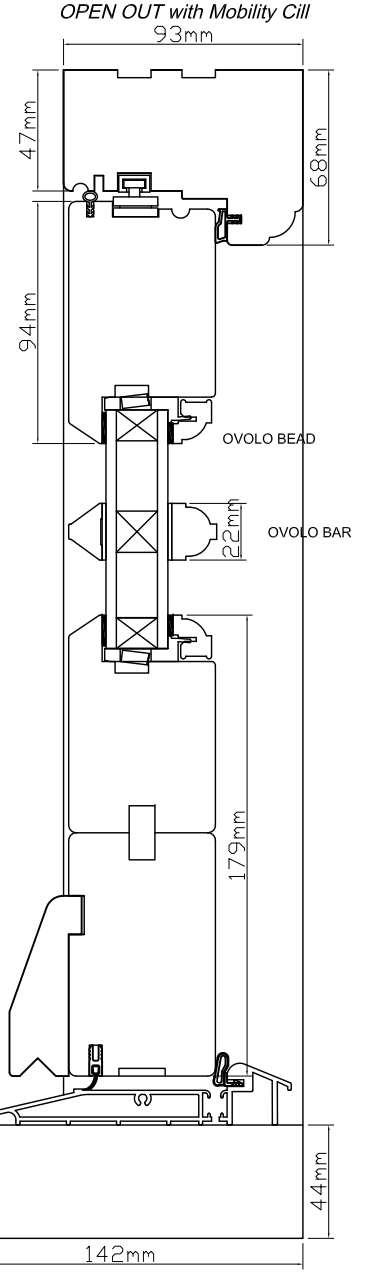

OPTIONAL DOOR LEAF PROFILES

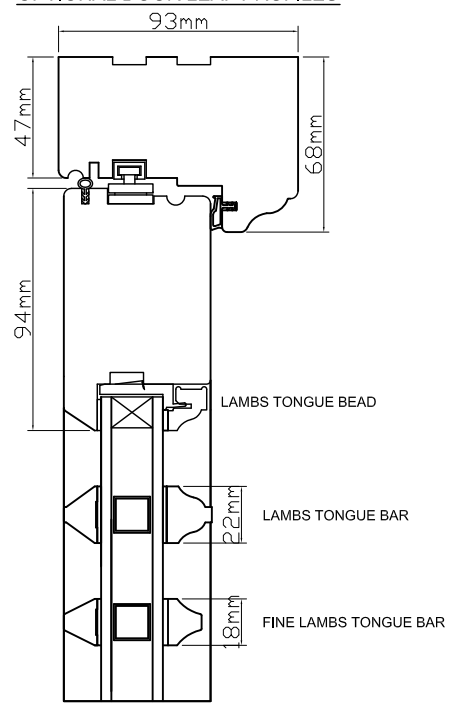

CONSERVATION OPEN OUT DOORSET & FRENCH DOORSET
HEAD,CILL, JAMB & TRICKLE VENT OPTIONS
U.K. PATENT GB2297344B & GB2283269B

www.mumfordwood.com

