NORTH WESTERN ELEVATION

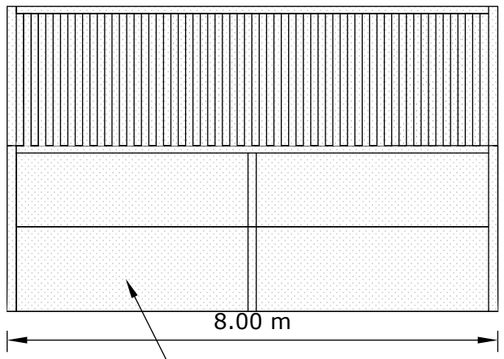

NORTH EASTERN ELEVATION

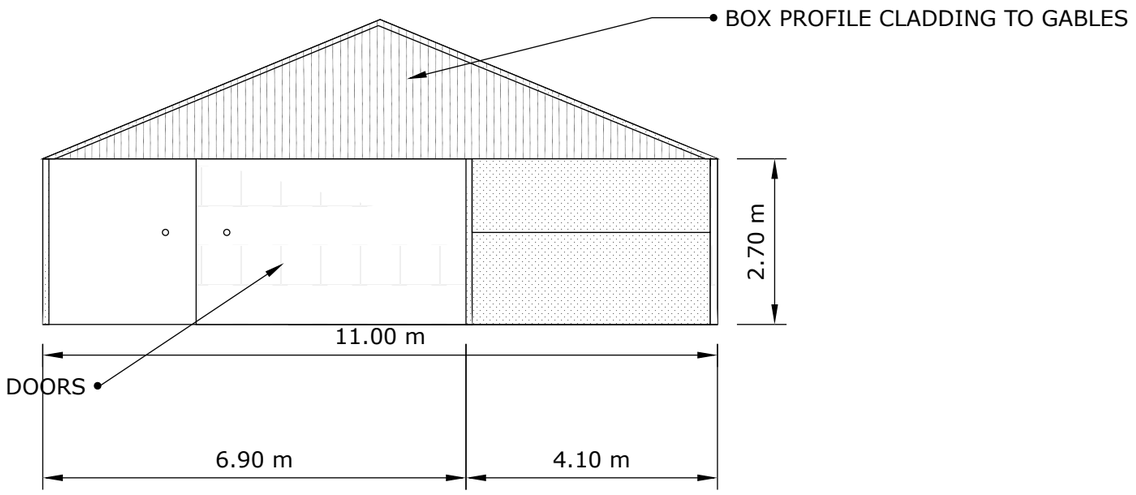

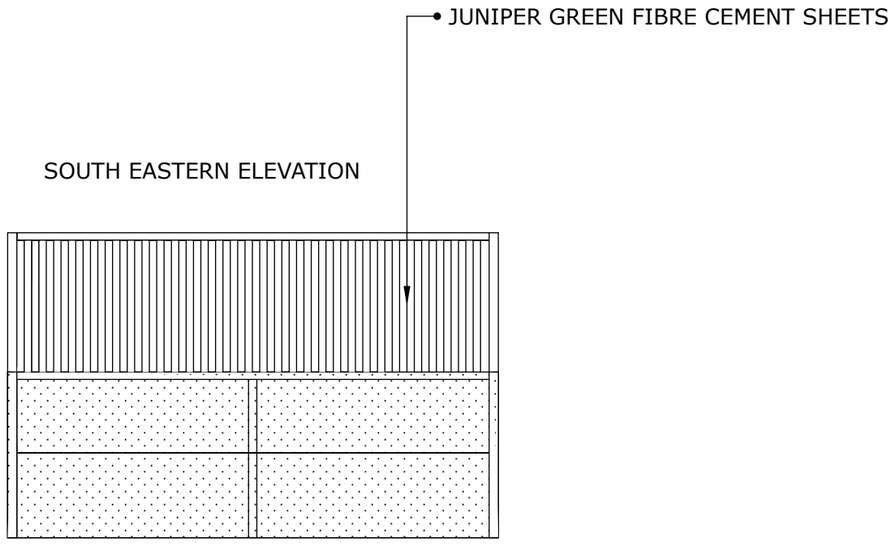

SOUTH WESTERN ELEVATION

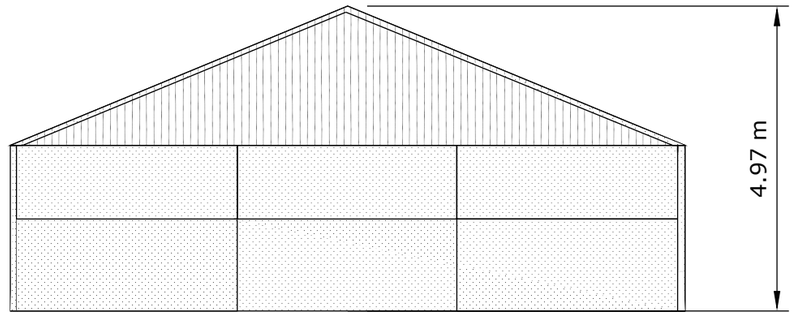

1:100 @A3