MUMFORD & WOOD
EST. 1954

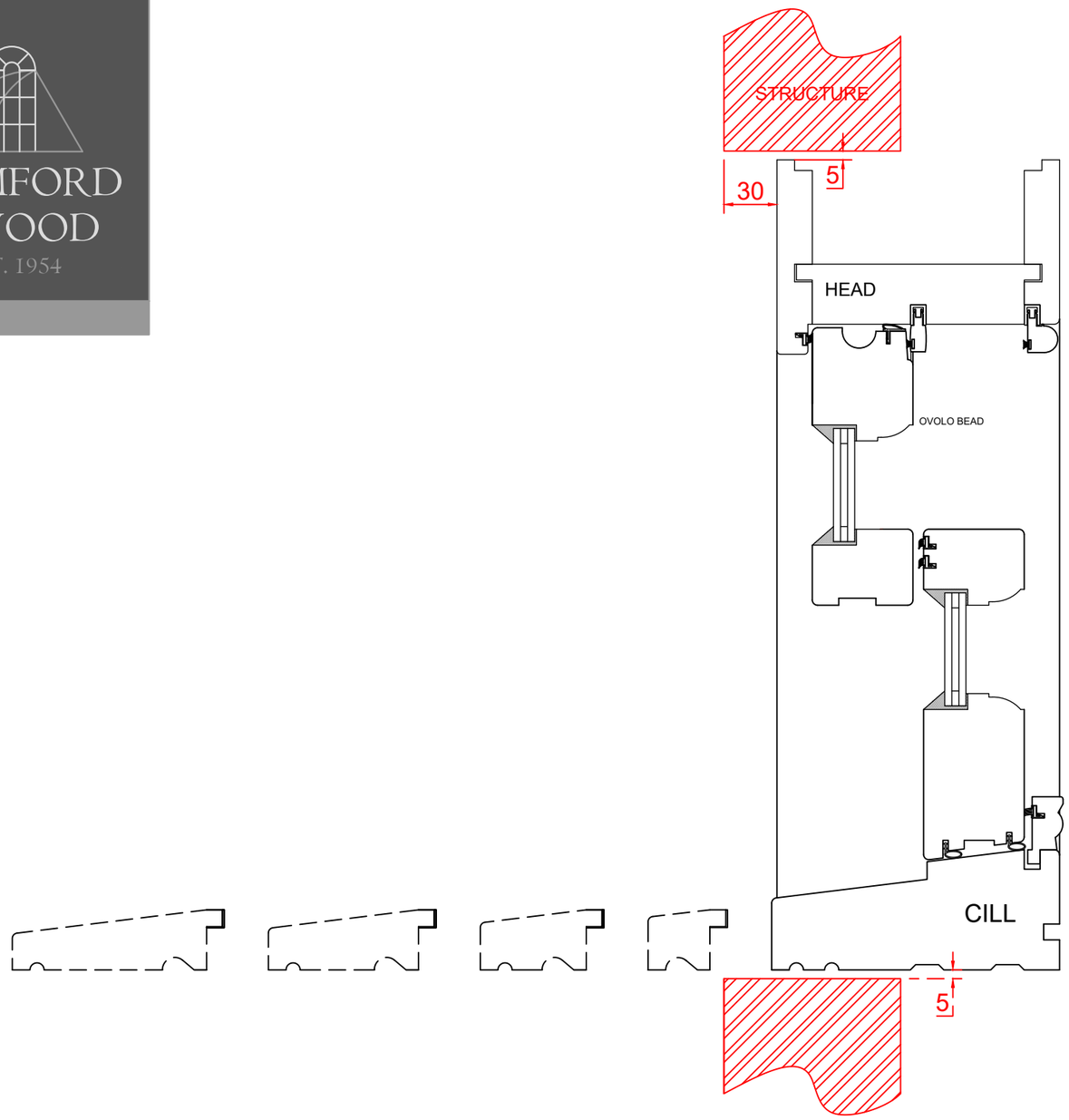

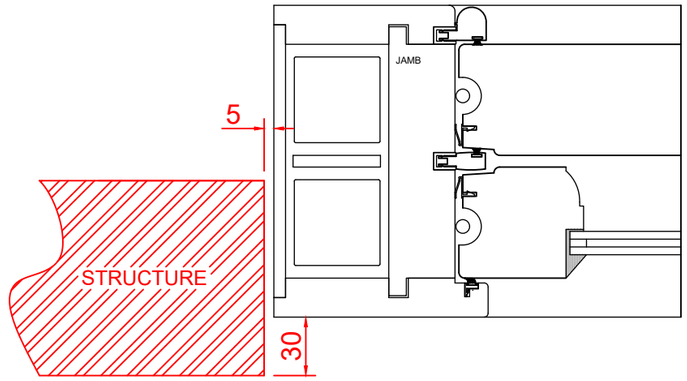

CLASSIC BOX SASH WINDOW

FLUSH REVEAL WITHIN STRUCTURE:

CLASSIC BOX SASH WINDOW

U.K. PATENT GB2297344B & GB2283269B