The delivery time will be extended by 3-5 days or even longer due to some irresistible factors. Free Shipping over €49! (/collections/special-sale)

info@ciarra.store (mailto:info@ciarra.store)

CIARRA 60cm Angled Cooker Hood LED Lights CBCB6736C-OW

Next Product » (/collections/cooker-hoods/products/ciarra-touch-control-angled-cooker-hood-60cm-a-energy-rating-cbcb6736n-ow)

Feature

- **Specifications**: High extraction rate of 380 m³/h with low noise sound pressure of 62dB (A), 3 venting speeds, push-button.
- **Two Ventilation Modes Optional**: Angled cooker hood 60cm can either recycling inside with **CBCF002X2-OW (https://www.ciarra.store/products/ciarra-recirculating-carbon-charcoal-filter-replacement-for-cooker-hoods-cbcf002x2-ow)** filters(not included) or ducting on the top with a pipe of 1.5m.
- **Lighting Efficiency:** 6000-6500K, keep working for over 10,000 hours.
- **Warranty**: 24 months.
- **Advice: Replace the carbon filter every 2-4 months.**

SKU: CBCB6736C-OW

With Carbon Filter

NONE | 1 SET | 2 SETS | 3 SETS

1

€129.99 EUR ~~€139.99 EUR~~

Add to Cart

Buy with PayPal

More payment options

Description | Technical Detail | What's Included | FAQ

Brand	CIARRA
Carton Model	CBCB6736C
Net Weight	8.15kg
Main Colour	black
Cooker Hood Material	black painting&glass

EUR

Product Dimensions (width X depth X height)	595mm*390mm*345mm
Installation height (adjustable)	750mm - 1125mm
Exhaust outlet diameter	150mm
Sound Power Level	62dB(A)
Energy Efficiency Rating	C
Fluid Dynamic Efficiency Class	E
Power	69W
Voltage/Frequency	220V-240V/50Hz
Lighting	2x2W
Lighting Efficiency class	A
Measured power consumption in off mode	0
Control	Push Button
Power Step details	Step1:173m³/h-56dB(A) Step2:/235m³/h 59dB(A) Step3:/288m³/h 62dB(A)
Warranty	24 months

Dimensions

- Height: 675mm - 1055mm (Adjustable)
- Width: 595mm
- Depth: 275mm

Other dimensions:

- Length of chimney: 400+400mm
- Ducting Outlet: 150mm in diameter
- Length of Pipe: 1500mm
- Package Dimensions: 655*373*434mm

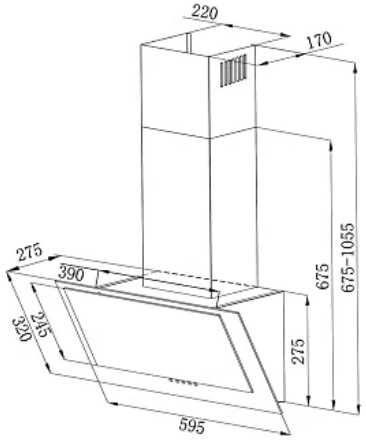

EUR

Related products

Powered by (http://my.yotpo.com/landing_page?redirect=https%3A%2F%2Fwww.yotpo.com%2Fpowered-by-yotpo%2F&utm_campaign=branding_link_reviews_widget_v2&utm_medium=widget&utm_source=ciarra.store)

☆☆☆☆☆

WRITE A REVIEW

★★★★★

BE THE FIRST TO WRITE A REVIEW

Online Support
(/pages/ciarra-contact-information)

24 Months Warranty
(/pages/ciarra-refund-policy)

Secure Payments
(/pages/ciarra-payment-method)

30 Days For Return
(/pages/ciarra-refund-policy)

Information

About CIARRA (/pages/about-ciarra)
Contact us (/pages/ciarra-contact-information)
FAQ (/pages/ciarra-faq)
Installation Video (/pages/installation-video)
Track Order (/pages/ciarra-track-order)

Support

Warranty (/pages/warranty)
Shipping Policy (/pages/ciarra-shipping-policy)
Payment Method (/pages/ciarra-payment-method)
Refund Policy (/pages/ciarra-refund-policy)
Terms Of Service (/pages/terms-of-service)
Privacy Policy (/pages/ciarra-privacy-policy)

Community

Become Distributor (/pages/become-a-ciarra-distributor)
CIARRA Blog (/blogs/news)
Get Coupon (/pages/get-coupon)
Affiliates Program (https://www.ciarra.store/blogs/news/affiliate-program)

Keep in Touch

Sign up for our newsletter and be the first to know about coupons and special promotions.

email@example.com

(https://www.facebook.com/CIARRA-Kitchen-Appliances-100876155083202)

Copyright © 2021 CIARRA (/). All rights reserved
Privacy Policy (/pages/ciarra-privacy-policy) | Terms Of Service (/pages/terms-of-service) | Shipping Policy (/pages/ciarra-shipping-policy)

EUR