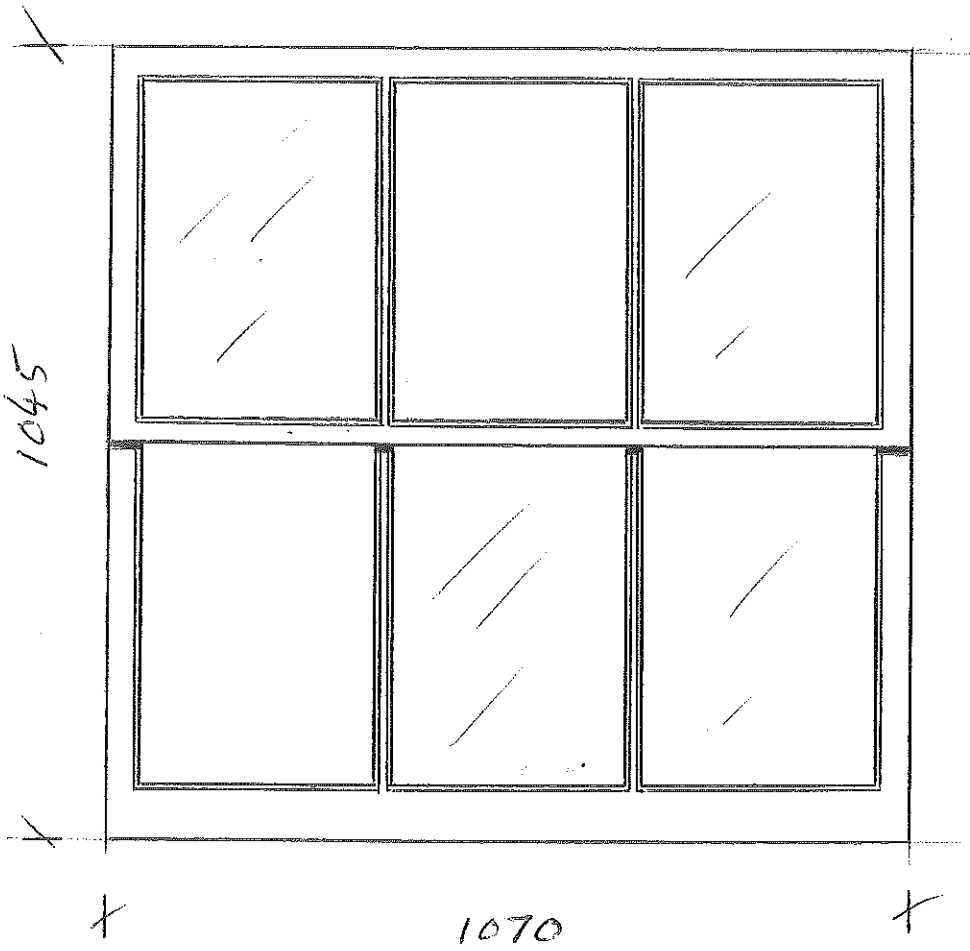

FRONT ELEVATION

PROPOSED REPLACEMENT
SLIDING SASHES.
SCALE 1:10

EXISTING
HEAD + JAMB
BOX SECTION

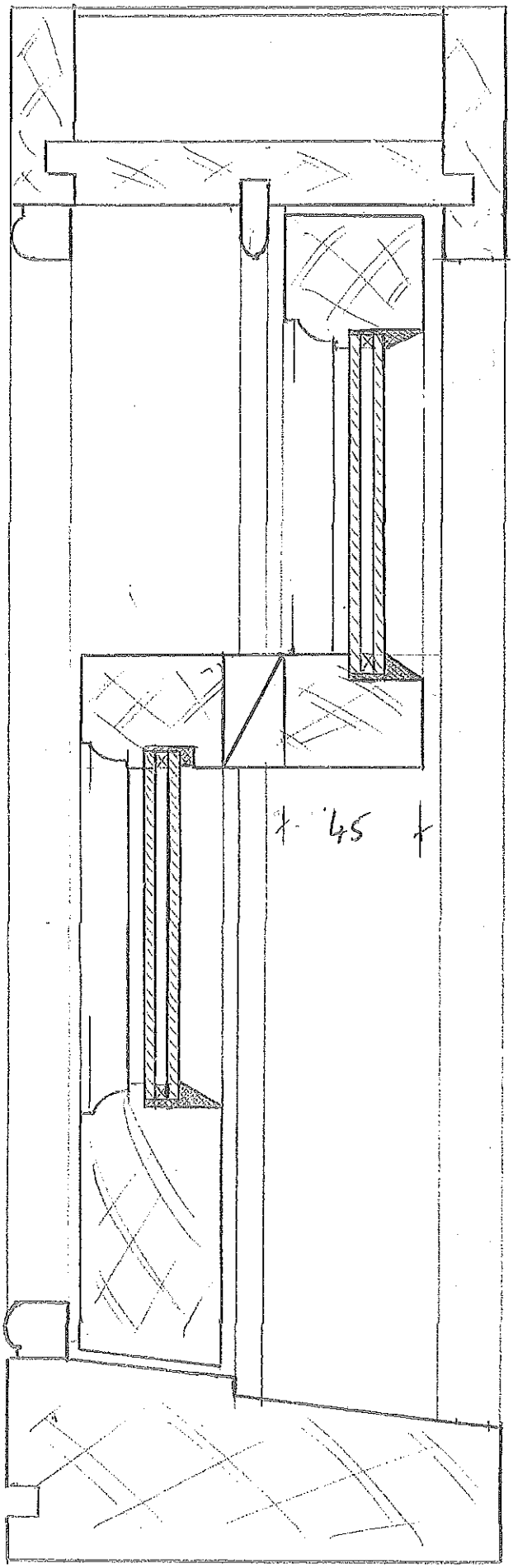

GLAZING BAR

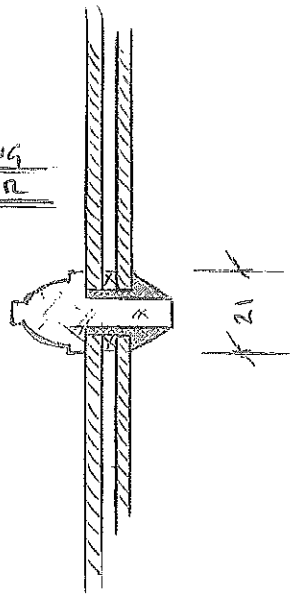

EXISTING
CILL.

GLAZING BAR DETAIL

SCALE 1:1

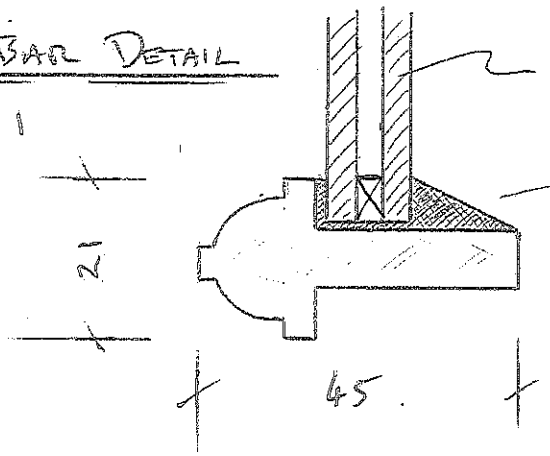

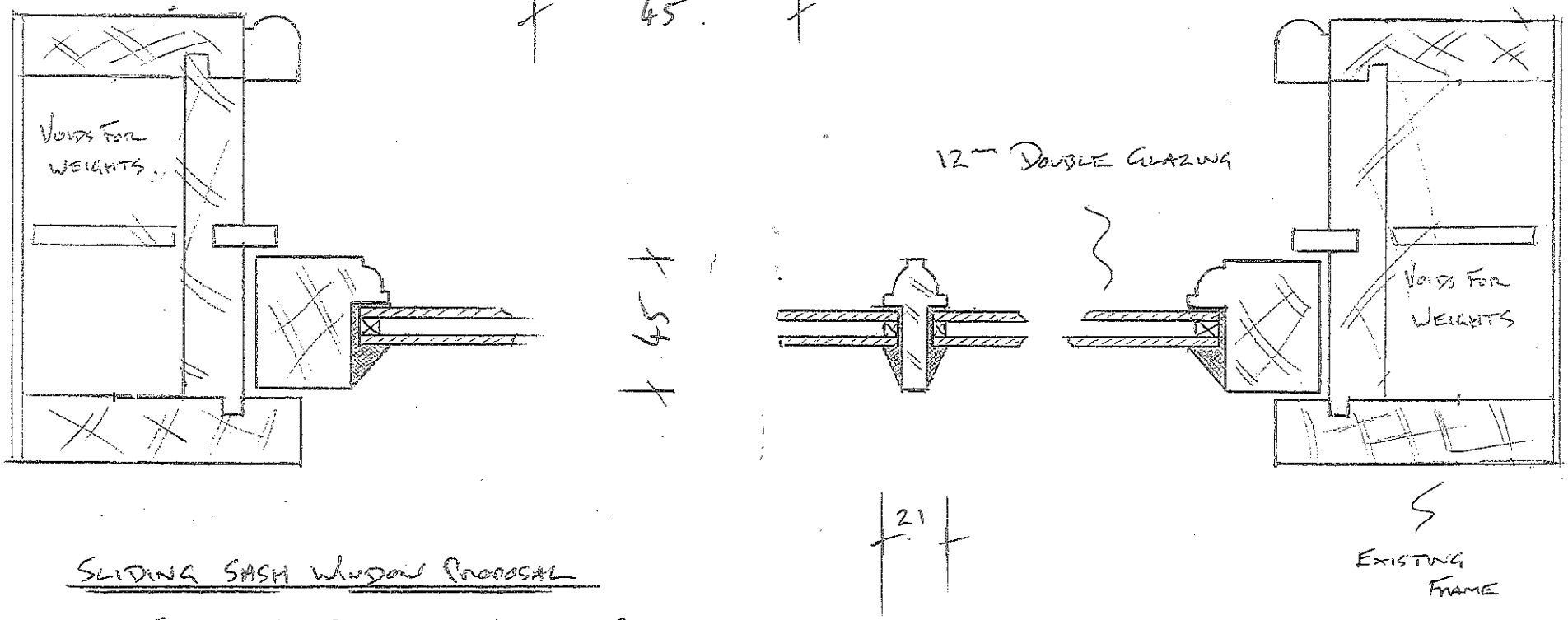

SLIDING SASH WINDOW PROPOSAL

- SECTION THROUGH UPPER SASH AND EXISTING FRAME.
- SCALE 1:2.