EXISTING DETAIL

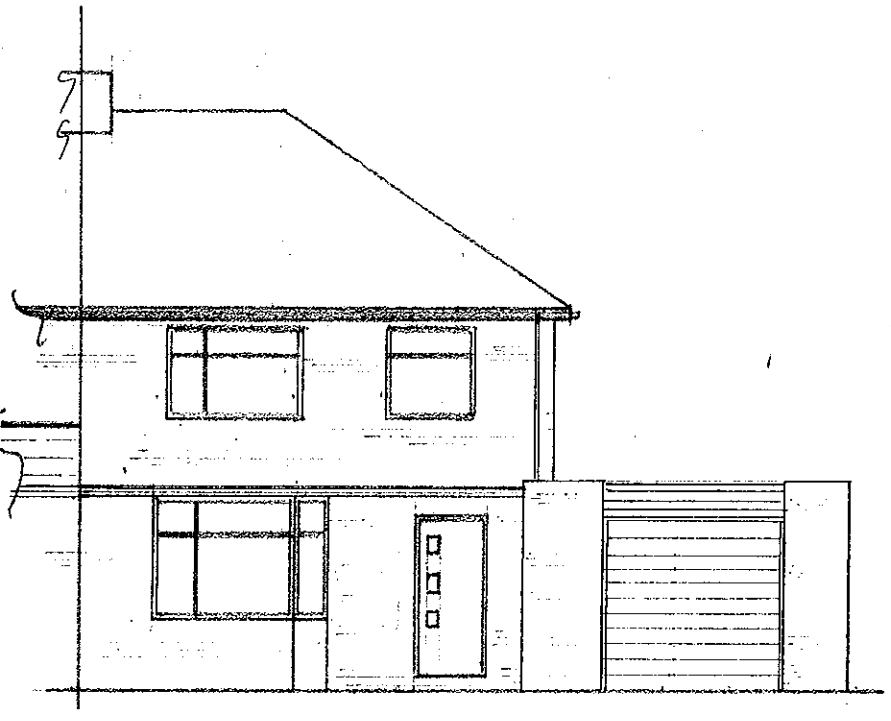

FRONT

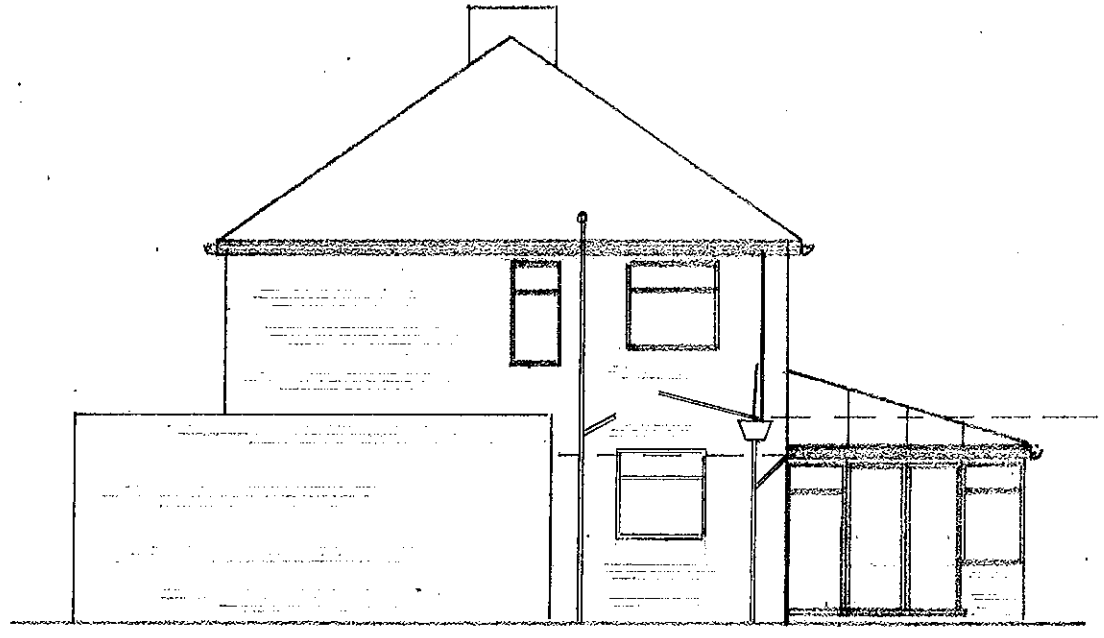

SIDE

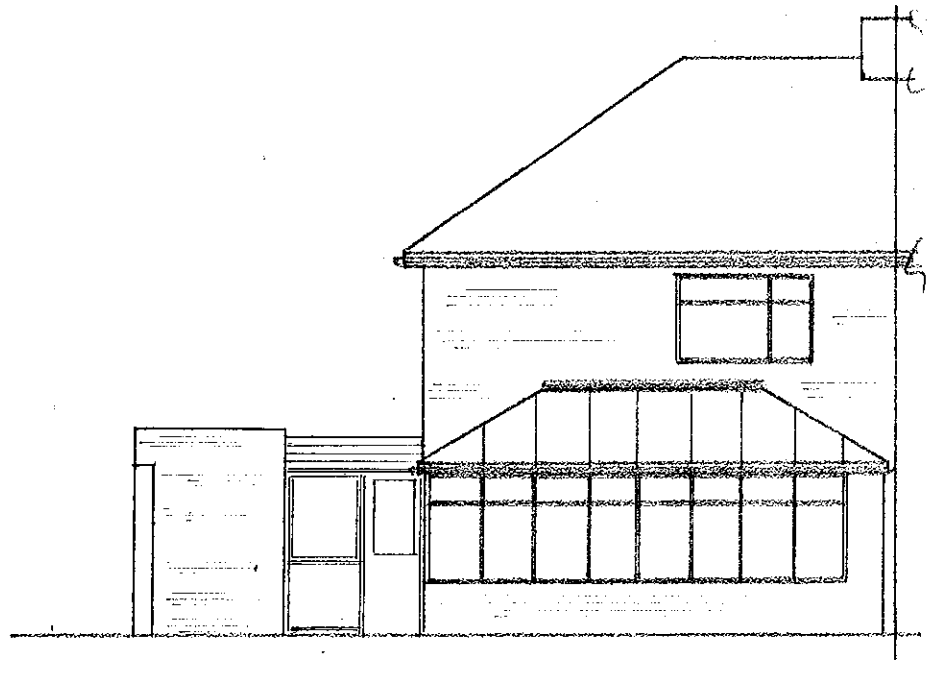

REAR

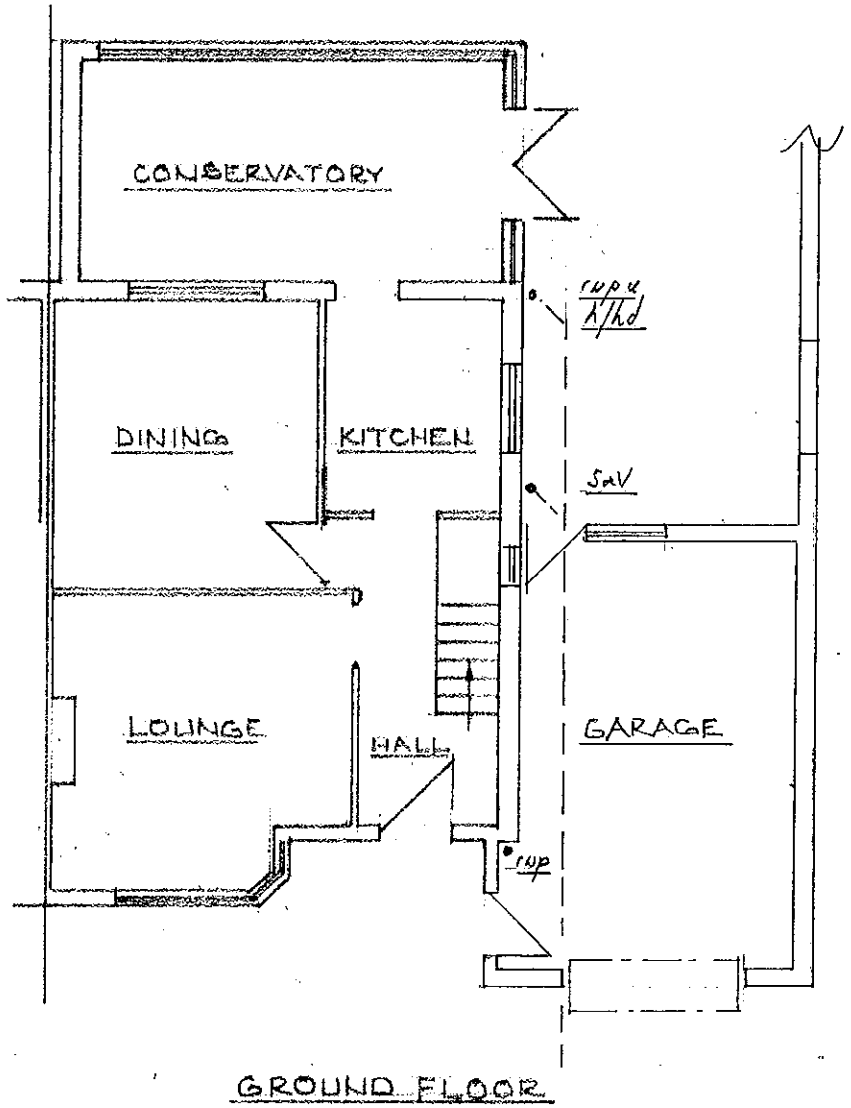

GROUND FLOOR

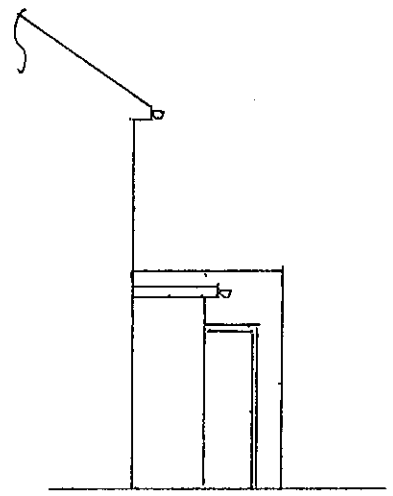

SIDE AT FRONT

Philip C Anthony – Building Services Consultant 40 Uttoxeter Road, Mickleover, Derby. DE3 9GE
Tel. 01332 513539 mobile. 078701 48111 email philip@pcac.wanadoo.co.uk

Project: *Proposed Building Work for Mr & Mrs Bailey at 7 Millbank Heanor Derbys DE75 7BQ*

Scale: 1:100 at A3 ***Drawing No. 0711-17/ sheet 1 of 2 Rev 0***

PROPOSED DETAIL

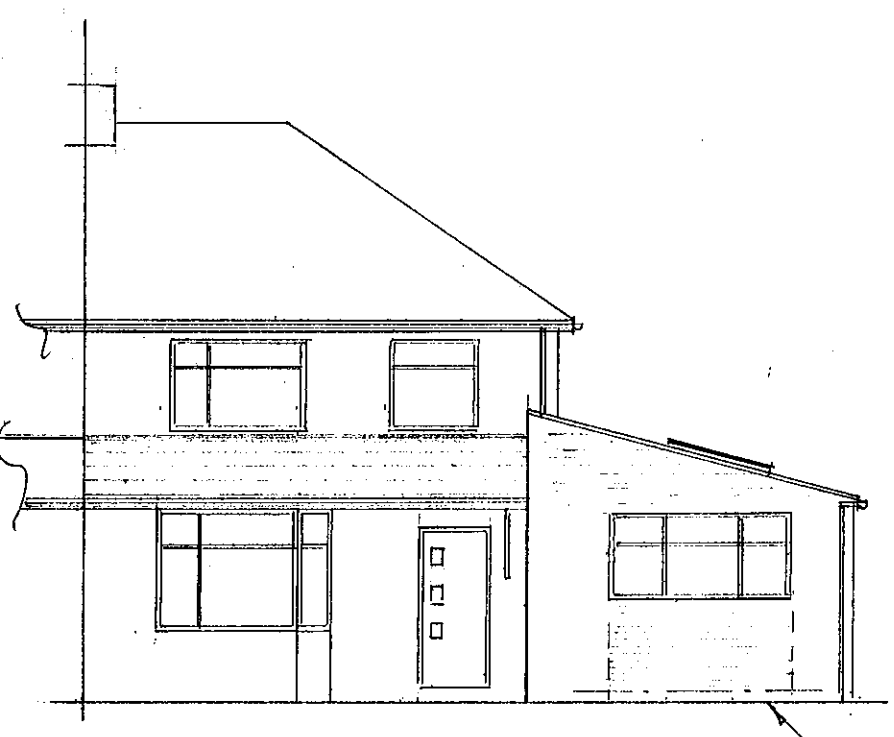

FRONT

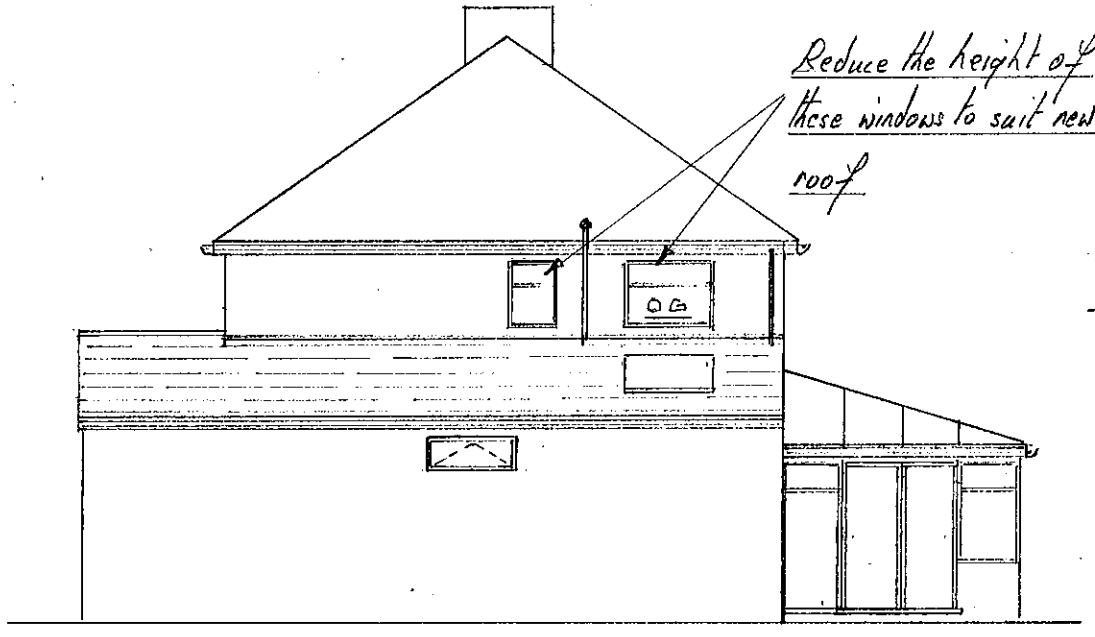

SIDE

Keylite Roof Window
1140 x 1400

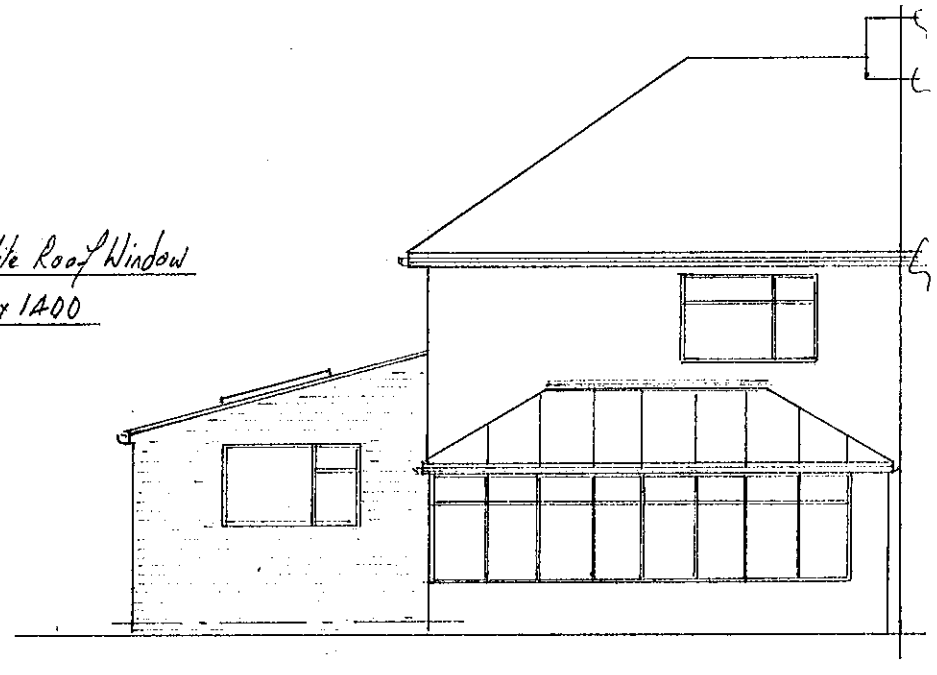

REAR

Lattric at grd level
see spec^

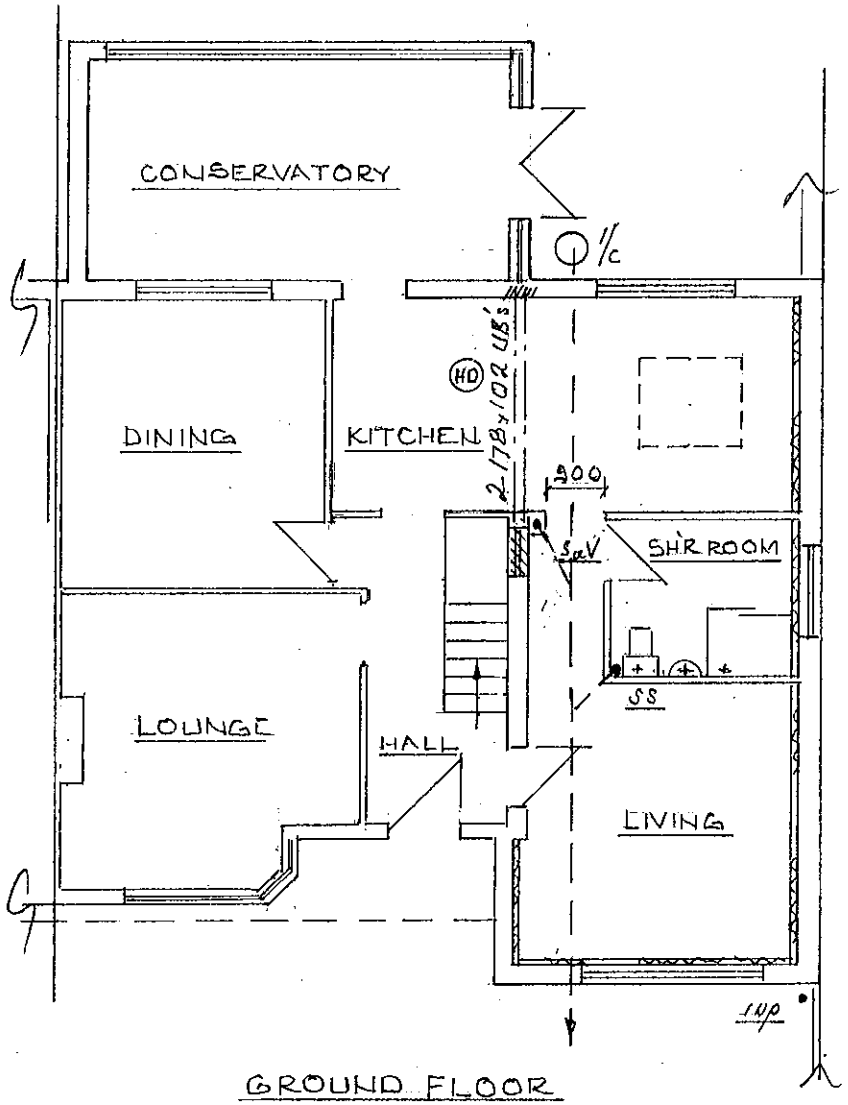

GROUND FLOOR

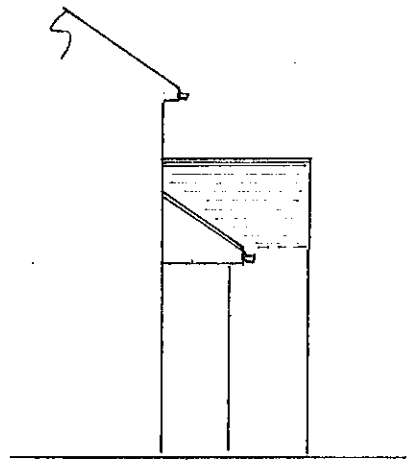

SIDE AT FRONT

Philip C Anthony – Building Services Consultant 40 Uttoxeter Road, Mickleover, Derby. DE3 9GE
Tel. 01332 513539 mobile. 078701 48111 email philip@pcac.wanadoo.co.uk

Project: *Proposed Building Work for Mr & Mrs Bailey at 7 Millbank Heanor Derbys DE75 7BQ*

Scale: 1:100 at A3 ***Drawing No. 0711-17/ sheet 2 of 2 Rev 0***

IT IS THE OWNERS RESPONSIBILITY TO ENSURE COMPLIENCE WITH THE PARTY WALL ACT of 1996. THE CLIENT OR CONTRACTOR SHOULD UNDERTAKE OR APPOINT FOR THE ROLE OF PRINCIPLE CONTRACTIOR AS DEFINED BY THE CDM REGULATIONS.

FOOTINGS – THE EXISTING GARAGE WALL FOOTINGS ARE TO BE CHECKED FOR SUITABILITY & IF NOT SATISFACTORY REPLCE WITH NEW CAVITY WALLS TO BE BUILT TO THE SPECIFICATION BELOW ON NEW STRIP CONCRETE FOOTINGS TO DIMENSIONS SHOWN OR ALTERNATIVELY TRENCH FILL WITH CONCRETE TYPE FOUNDATION, DEPTH TO SUITABLE LOAD BEARING STRATA - 1m MIN IN CLAY. ALL FOOTINGS TAKEN BELOW INVERT LEVEL OF LOCAL DRAIN RUNS. ALL TO THE SATISFACTION OF THE BUILDING CONTROL SURVEYOR.

NEW GROUND FLOOR – 150mm COMPACTED & SAND BLINDED HARDCORE 1200 DPM LAP TO INNER LEAF DPC. 100mm CONCRETE SLAB WITH 70mm OF CELOTEX GA3070Z INSULATION WITH A 500 VCL OVER, 25 x 135 U/STD INSTALLED TO Mfrs INSTRUCTIONS (0.21W/MK). 65mm CONCRETE SCREED FINISH. **EX GARAGE FLOOR** AS ABOVE MINUS HARDCORE AND CONCRETE SLAB. LAY A 1200 DPM BELOW THE CELOTEX

DRAINS– FOUL – SINK & SHOWER WASTE 40mm H/B 32mm ALL WITH INTEGRAL DEEP SEAL TRAPS & STRAINER WC WITH INTEGRAL DEEP SEAL TRAP 100mm DIA DISCHARGING TO STUB STACK WITH DURGO VALVE TO THE EXISTING FOUL DRAINAGE SYSTEM. ACTUAL LAYOUT OF KITCHEN, SHOWER ROOM TO BE DETERMINED BY CLIENT. ALL NEW DRAINS RUN IN 100mm DIA FLEXIBLE JOINTED DRAIN PIPING ON 150mm PEA SHINGLE BEDS MIN FALLS 1 IN 80. LINTEL OVER DRAINS THROUGH BRICKWORK & ENCASE IN 150mm CONC. DRAINS UNDER NEW WORKS.**SURFACE WATER** - UPVC GUTTER & DOWN PIPES TO A SOAKAWAY CONSTRUCTED IN ACCORDANCE WITH DOCUMENT H3 PARA 3.26. A PERCOLATION TEST WILL BE REQUIRED, THE SOAKAWAY TO BE POSITIONED A MINIMUM OF 5M FROM ANY BUILDING OR ROAD. IF THE GROUND IS NOT SUITABLE FOR A SOAKAWAY THEN THE SURFACE WATER IS TO BE RUN TO THE NEAREST DRAIN. NEW UPVC INSPECTION CHAMBERS ON 200mm PEA SHINGLE BED WITH BACK FILL.. NOTE THAT THE EXISTING S&V & BATHROOM DRAINS WILL REQUIRE RE ROUTING. ENCASE IN 25mm ACOUSTIC WRAP & BOX IN WITHIN THE EXTENSION. INTERNAL I/C's TO HAVE A BOLTED COVER WITH A DOUBLE AIR TIGHT SEAL.

NEW WALLS– CAVITY WALLS 103 FACING BRICKS EXTERNALLY TO MATCH THE EXISTING WALLS, 75mm CAVITY FILLED WITH DRITHERM 32 FROM UNDERSIDE OF FLOOR INSULATION UP TO CEILING INSULATION & TOP OF GABLES. 100 LIGHT WEIGHT AIRCRETE BLOCKS INNER LEAF (K=0.11) WITH 12.5mm PLASTERBOARD ON DABS WITH CONTINUOUS RIBBONS OF ADHESIVE TO ALL EDGES & SKIM FINISH (0.28W/MK). HYLOAD/BLUE BRICK DPC 150mm ABOVE GROUND LEVEL, INSULATED CATNIC LINTELS OVER ALL NEW OPENINGS WITH 150mm BEARING, KEY NEW BWK TO EXISTING. STAINLESS STEEL CAVITY WALL TIES AT 900mm HORIZONTAL & 450mm VERTICAL SPACING (300mm WITHIN 225mm OF OPENINGS) CAVITY BARRIER AT ALL REVEALS. LEAN CONCRETE MIXES CAVITY FILL TO 225mm OF LOWEST DPC.

EXISTING EXTERNAL GARAGE WALLS (IF RETAINED) - INSULATE WITH CELOTEX TB 3040 BY OVER BATTENING WITH 25 x 50 BATTENS AT 600 CRS. TAPE THE JOINTS WITH CELOTEX INSULATION TAPE AND SEAL EDGES WITH MASTIC. 12.5 PLASTERBOARD & SKIM FINISH (0.35W/MK). INFILL OF EX GARAGE DOOR OPENING TO BE WALLS AS ABOVE ON A CATNIC LINTEL AT FLOOR LEVEL SET INTO BWK EACH SIDE 150mm.

STUD INTERNAL WALLS – 100mm STUD PARTITIONS, 12.5mm P/BRD & 6mm SKIM BOTH SIDES ON 75 x 50mm SW SOLE PLATE & HEADERS 75 x 50 STUD AT 600mm CRS. WITH NOGGINS & CROSS BRACING. FRICTION FIT TO VOID ROCKWOOL ACOUSTIC SLAB.

VAULTED ROOF – INCLINE 15 DEGREES & COVERED MARLEY MENDIP SMOOTH TILES AT 100mm HEADLAP ON 38 x 25 BATTENS ON TYVEK BREATHER MEMBRANE OVER 50 x 150 C24 GRADE RAFTERS AT 400 CRS WITH EACH RAFTER ANCHORED TO THE 75 x 100 WALL PLATE WITH BAT STRAPS, ANCHOR GABLE RAFTERS AT 2M MAXIMUM CRS & AT TOP OF SLOPE. INSTALL BETWEEN RAFTERS (FRICTION FIT) 120mm OF CELOTEX XR3120 INSULATION & BELOW RAFTERS 25mm OF CELOTEX PL3000 INSULATION (25+12.5) & SKIM OVER TO TOTAL SLOPE OF THE ROOF WITHIN THE ROOM (0.18W/MK). INSTALL ROOF WINDOWS IN ACCORDANCE WITH THE MANUFACTURERS SPECIFICATION ALONG DOUBLE RAFTERS. ROLLED STEEL BEAMS TO BE BOLTED THROUGH SPACER TUBES WITH M12 BOLTS AT 600 CRS. TO REST ON BLUE BRICK PADSTONES ALL ENCASED IN 12.5 FIRELINE BOARD & 6mm SKIM.

NB: ONE WINDOW OR DOOR OF NEW ROOM TO BE FITTED WITH TRICKLE VENT 8000 sq. mm ALL NEW WINDOWS & DOORS TO BE DOUBLE-GLAZED WITH 16mm MIN AIR GAPS & LOW EMISSIVITY INNER PANES (1.6W/M²K) OPENING LIGHTS TO BE 1/20TH FLOOR AREA MINIMUM. GLAZING OF DOORS & WINDOWS ADJOINING DOORS TO BE SAFETY GLAZED. DOORS & WINDOWS TO BE FITTED WITH DRAUGHT EXCLUDERS, NEW RADIATORS FOR CENTRAL HEATING SYSTEM TO HAVE THERMOSTATIC VALVES, ALL PLUMBING TO BE IN ACCORDANCE WITH THE DOMESTIC HEATING COMPLIANCE GUIDE. ALL ROOMS TO BE FITTED WITH LIGHT FITTINGS THAT WILL TAKE ONLY LAMPS HAVING A LUMINOUS EFFICIENCY GREATER THAN 40 LUMENS PER CIRCUIT. NEW KITCHEN TO BE FITTED WITH AN EXTRACT COOKER HOOD 30Lt/Min EXTRACT RATE, SHOWER ROOM TO BE FITTED WITH AN XPELAIR DX100T EXTRACT UNIT BOTH DUCTED TO THE EXTERNAL AIR. ALL INSULATION IS CONTINUOUS TO ENSURE NO COLD BRIDGING. INSTALLL IN THE KITCHEN AREA HEAT DETECTOR(HD) IN ACCORDANCE WITH BS5446 PT1. TO BE POSITIONED ON CEILINGS A MINIMUM OF 300mm FROM ANY WALL OR LIGHT FITTING.

ALL ELECTRICAL WORK IS TO BE COMPLIANT WITH PART P & IS TO BE CARRIED OUT BY A MEMBER OF THE COMPETENT PERSONS SCHEME, A SIGNED INSTALLATION CERTIFICATE TO BE LODGED WITH BUILDING CONTROL ON COMPLETION OF THE RELEVANT WORK.

ALL DIMENSIONS TO BE CHECKED ON SITE BY BUILDER PRIOR TO THE COMMENCEMENT OF WORKS, REPORT ANY DISCREPANCIES TO THE CONSULTANT.

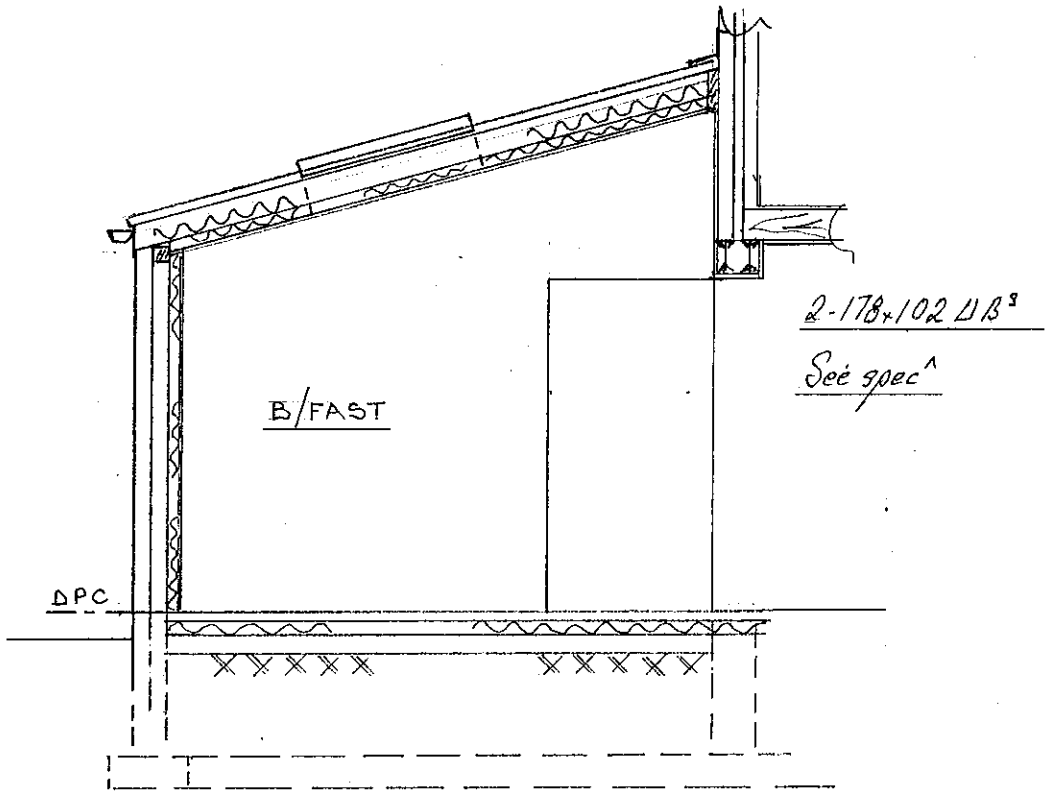

SECTIONS

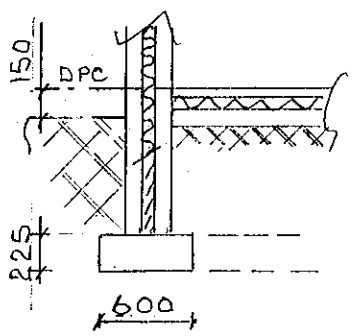

NEW FOOTING AND FLOOR DETAIL

Philip C Anthony – Building Services Consultant 40 Uttoxeter Road, Mickleover, Derby. DE3 9GE
Tel. 01332 513539 mobile. 078701 48111 email philip@pcac.wanadoo.co.uk

Project: *Proposed Building Work for Mr & Mrs Bailey at 7 Millbank Heanor Derbys DE75 7BQ*

Scale 1:50 at A3 ***Drawing No. S0711-17/ sheet 1 of 1 Rev 0***