Plan View
Scale 1:200

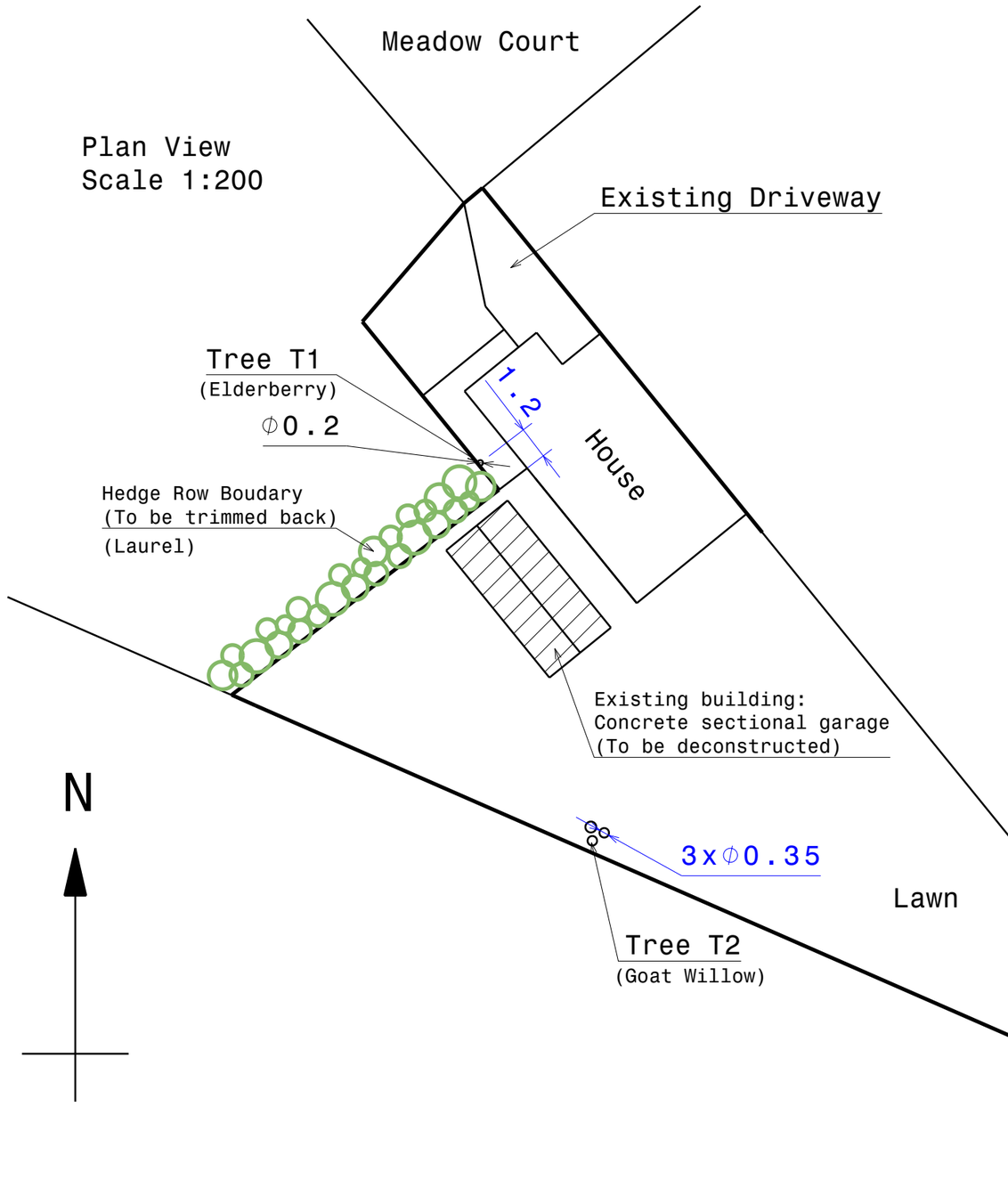

Side View
Scale 1:100

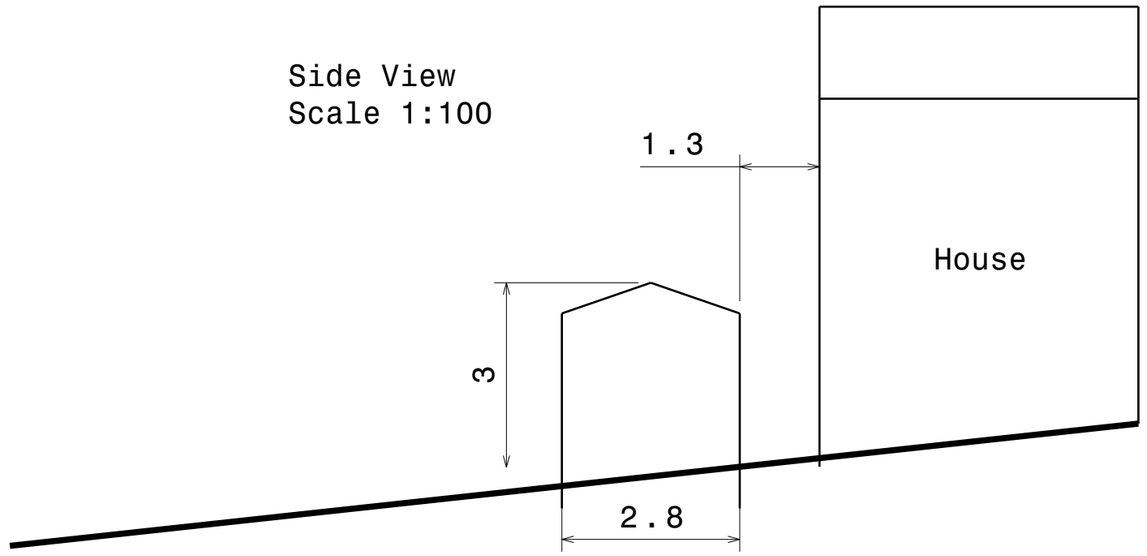

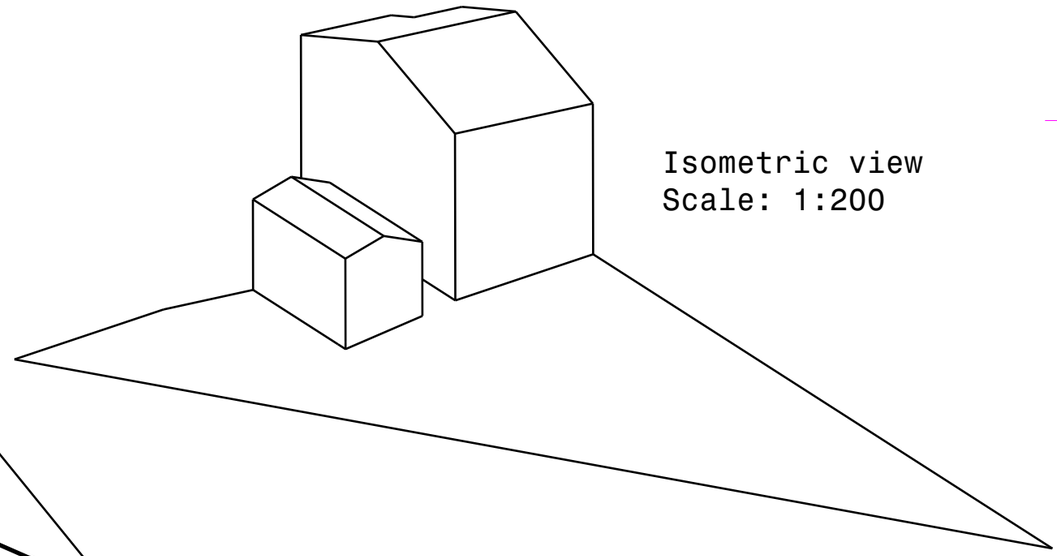

Isometric view
Scale: 1:200

Mr George Grey AVA/2021/0376
38 Meadow Ct: Erection of replacement outbuildng
Existing layout

Units: Metre

A3

G Grey	07/04/21	Floor plan & Elevation views	02	
G Grey	06/01/21	Original	01	Page
DRAWN	DATE	REVISION	ISSUE	1/3
IF IN DOUBT ASK		PART NUMBER 1		

This drawing and copyright thereof are the property of George Grey
They must not be reproduced in part or whole or passed on to others without permission

Plan View
Scale 1:200

Meadow Court

Existing Driveway

Tree T1
(Elderberry)
⌀0.2

1.2

House

Hedge Row Boudary
(To be trimmed back)
(Laurel)

0.5

1.3

6.2

2

6.2

Proposed Outbuilding

N

3x⌀0.35

4.8

Tree T2
(Goat Willow)

Lawn

Side View
Scale 1:100

1.3

House

5.5 MAX

4 MIN

6.2

0.7
Below ground

Outbuilding proposal

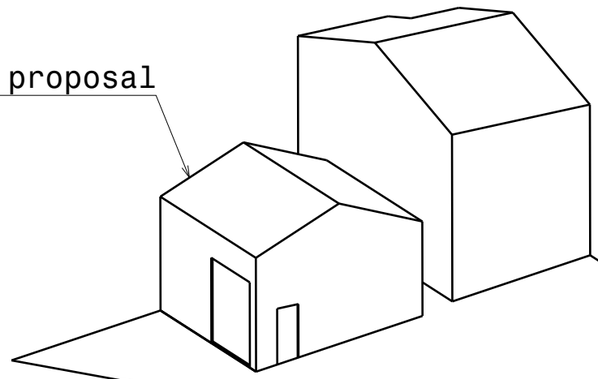

Isometric view
Scale: 1:200

Mr George Grey AVA/2021/0376
38 Meadow Ct: Erection of replacement outbuildng
Detail Block Plan

Units: Metre

A3

G Grey	07/04/21	Floor plan & Elevation views	02	
G Grey	06/01/21	Original	01	Page
DRAWN	DATE	REVISION	ISSUE	2/3
IF IN DOUBT ASK			PART NUMBER 1	

This drawing and copyright thereof are the property of George Grey
They must not be reproduced in part or whole or passed on to others without permission

Rear elevaion
North facing
1:100

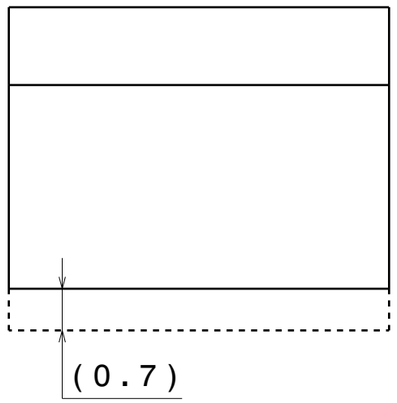

Side elevation
East facing
1:100

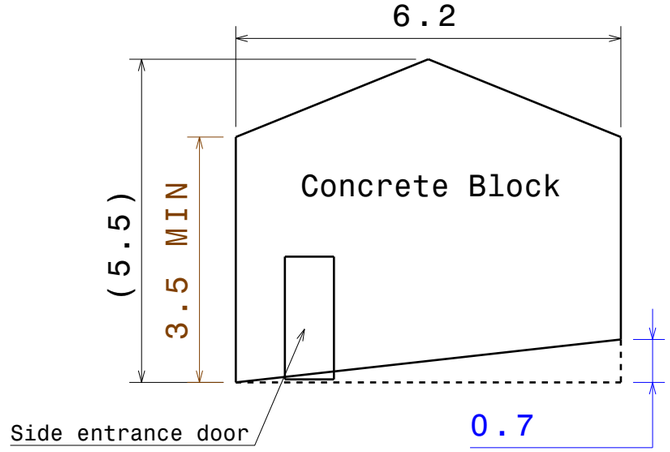

Front elevation
South facing
1:100

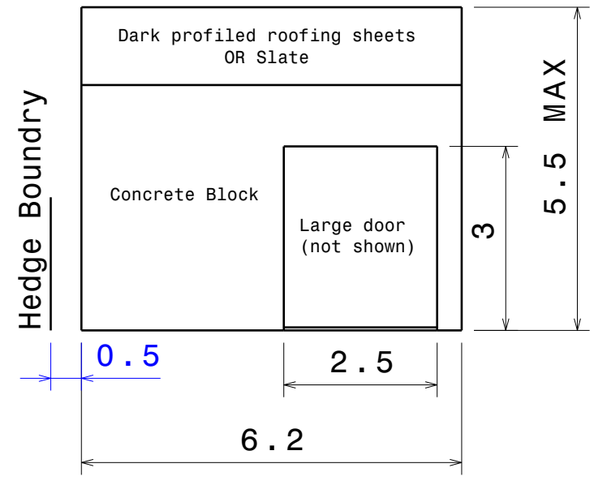

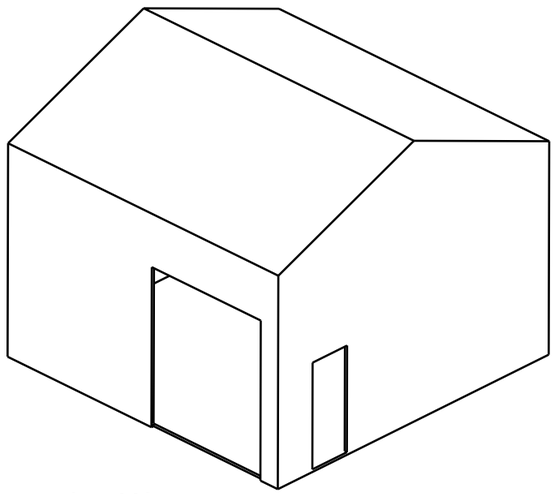

Isometric View
1:100

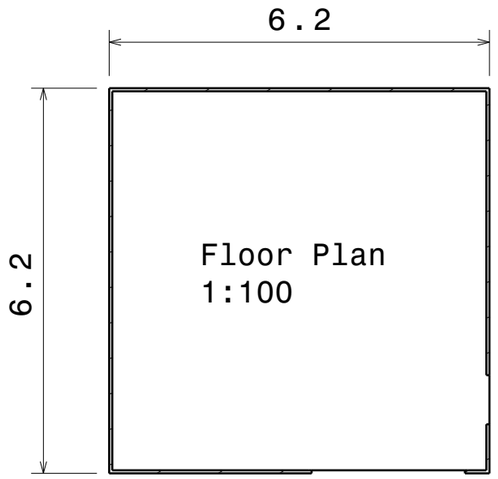

Floor Plan
1:100

Mr George Grey AVA/2021/0376
38 Meadow Ct: Erection of replacement outbuildng
Building size details

Units: Metre

A3

G Grey	07/04/21	Floor plan & Elevation views	02	
G Grey	06/01/21	Original	01	Page
DRAWN	DATE	REVISION	ISSUE	3/3
IF IN DOUBT ASK		PART NUMBER 1		

This drawing and copyright thereof are the property of George Grey
They must not be reproduced in part or whole or passed on to others without permission

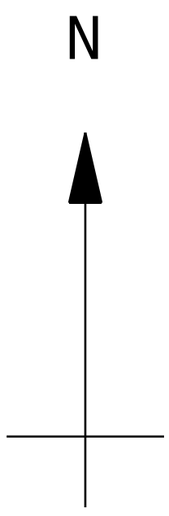
N