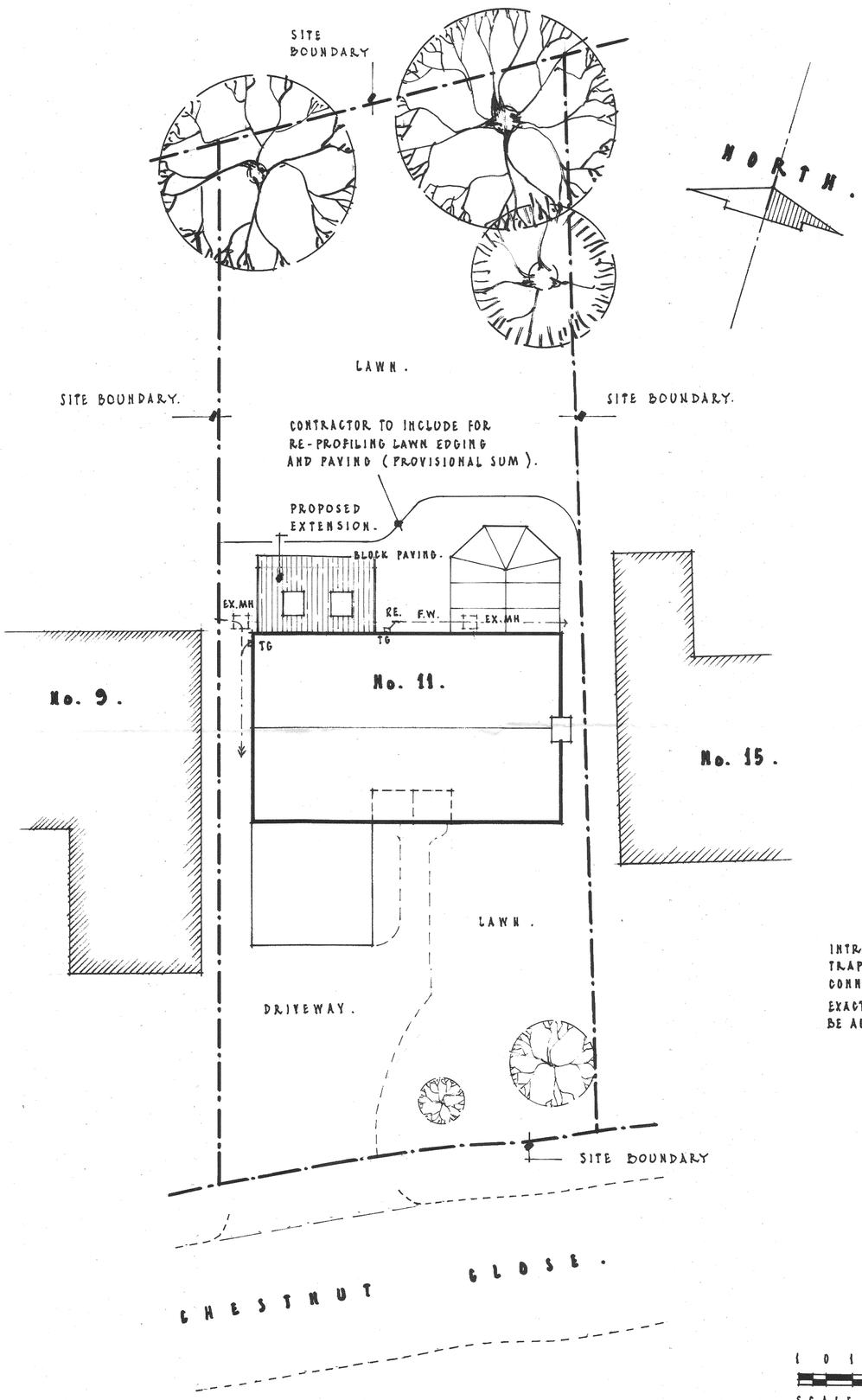

SITE PLAN.

1 0 1 2 3 4 5 6 M.

SCALE 1:100 @ A1.

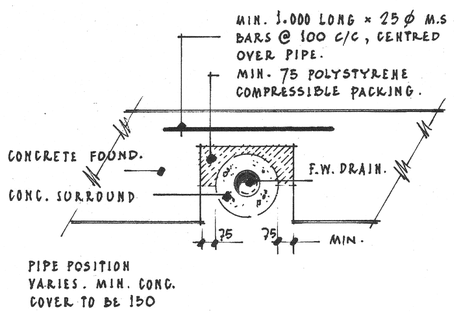

(DETAIL N/A.) **DETAIL B.**

SCALE 1:20 @ A1.

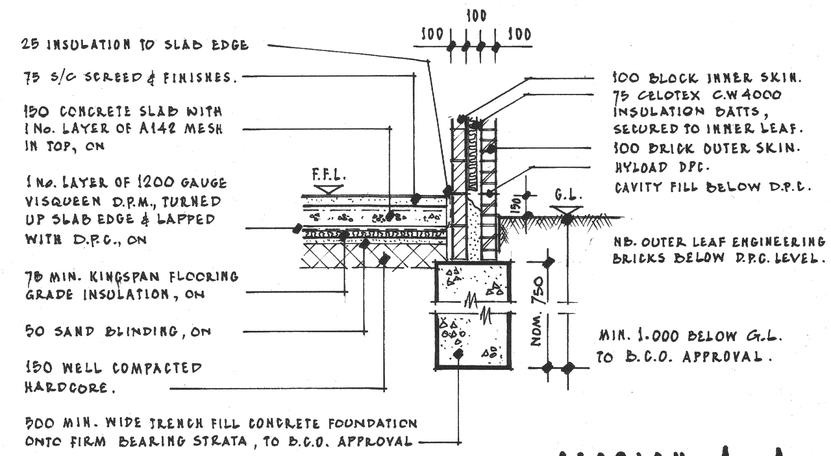

SECTION A-A.

SCALE 1:20 @ A1.

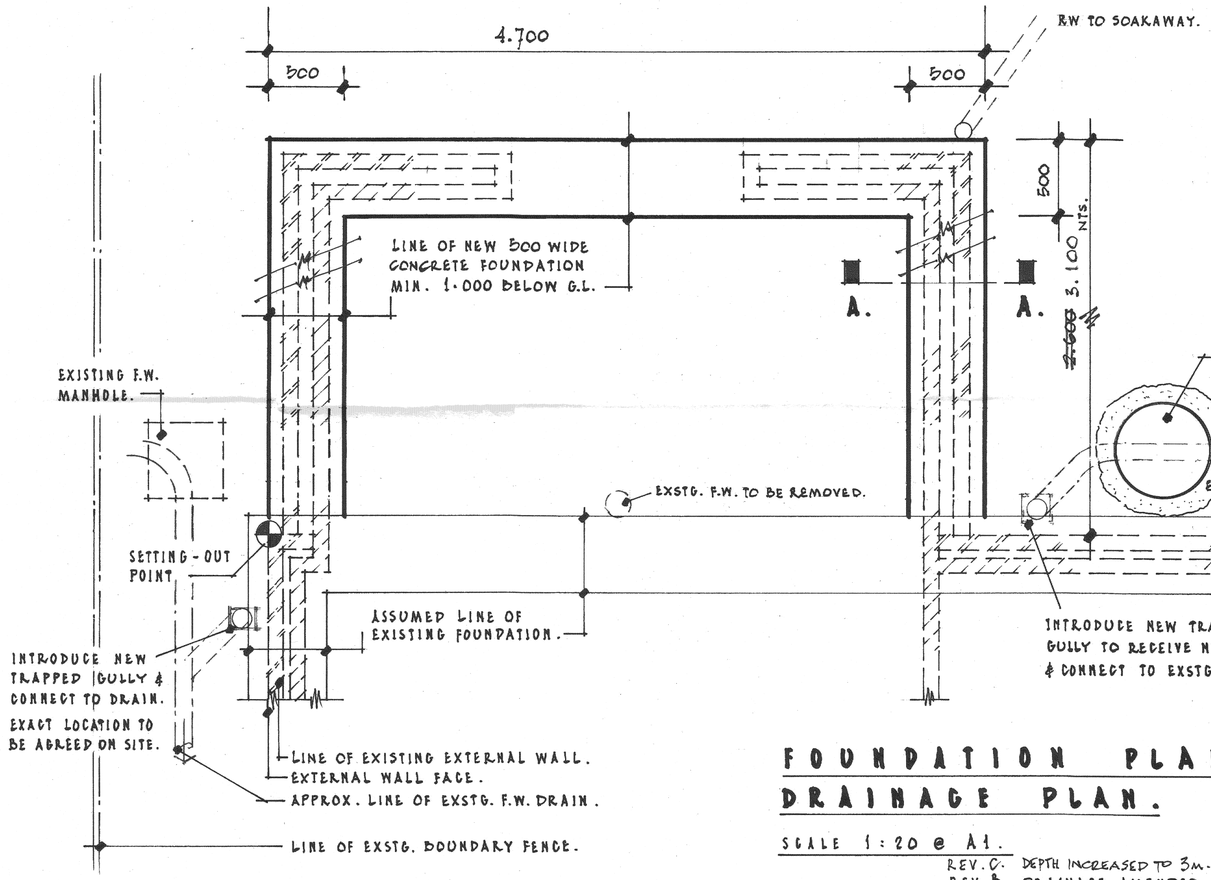

NOTE

ALL DRAINAGE TO COMPLY WITH B.S. CoP 8301 AND PART 'H' OF THE BUILDING REGULATIONS.

FOUNDATION PLAN.
DRAINAGE PLAN.

SCALE 1:20 @ A1.

0.5 0 1 M.

SCALE 1:20 @ A1.

REV. C.	DEPTH INCREASED TO 3m.	MAY '21.
REV. B.	DRAINAGE AMENDED.	MAR '21.
REV. A.	FOUNDATION & DRAINAGE WORKS ADDED.	MAR '21.

PROPOSED REAR EXTENSION.
11 CHESTNUT CLOSE,
DUFFIELD DE56 4HD.

PROPOSED SITE PLAN.
DRAINAGE & FOUNDATION PLANS.

SCALE. 1:100 @ A1 DATE. FEB. '21 No. RST/04"C"
1:20 @ A1

rstheilwellarchitect@mail.com