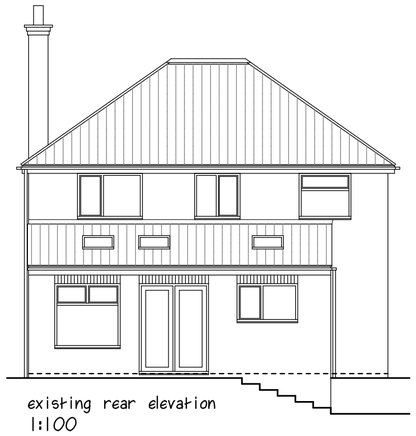

existing rear elevation
1:100

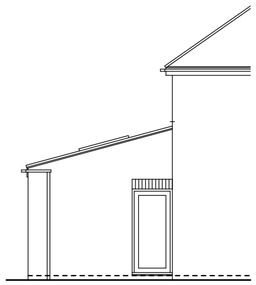

existing side elevation
1:100

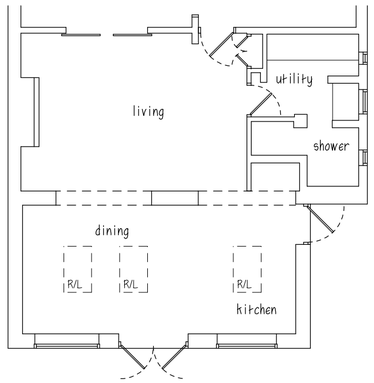

existing ground floor plan 1:100



block plan 1:500
0m 8m 20m



Ordnance Survey (c) Crown Copyright 2021. All rights reserved. Licence number 100022432

site location plan 1:1250
0m 20m 50m

N

STEELWORK:
Universal beams to be installed in accordance with Consulting Engineer's details and layout.
Construct padstones as specified and encase beam in minimum 2 No layers of 12.5mm GYPROC WallBoard (staggered joints) with skim finish to provide min 30 minutes fire protection.
If possible, install cavity tray above with weepholes at max. 450mm c/c with at least 2 no. per opening.

Soffit of beam lined with insulated plasterboard (minimum R value of 0.50m2K/W) with sealant bead to front and back of frame below soffit.

BIFOLD DOORS (to achieve a minimum U value of 1.2W/m2K):
New bifold doors in RAL7016 anthracite grey powder coated aluminium with opening arrangment as shown.
Doors to be installed with frame to overlap cavity by minimum 30mm and with top & bottom tracks.
Cavities closed at reveals, sill & jambs using insulated plasterboard (minimum R value of 0.50m2K/W).

Provide laminated or toughened safety glass as indicated on elevations with asterisk in accordance with Building Regulations Part N 1998 to bifold doors below 1500mm generally to BS 6206 1981 & BS EN 126002002

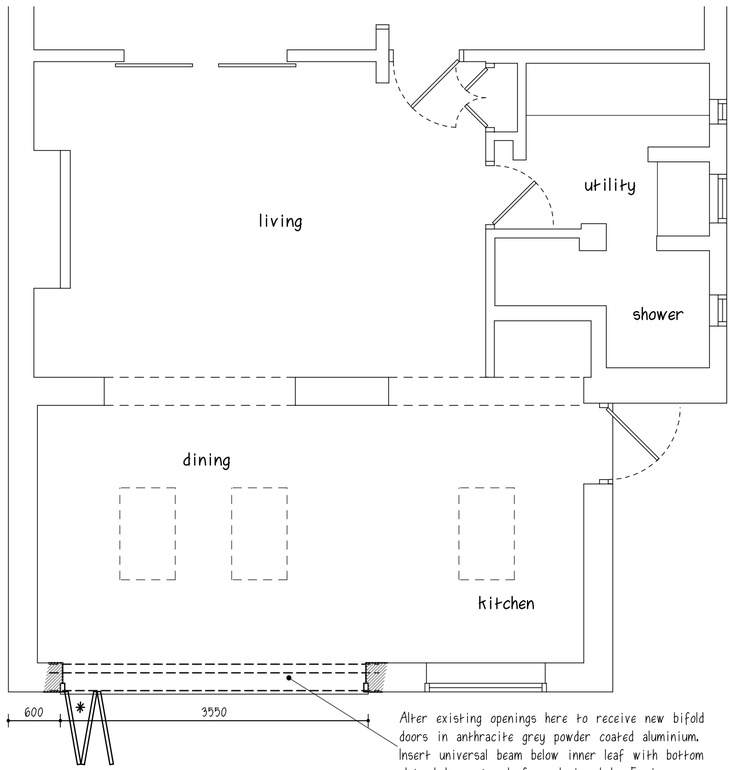

Alter existing openings here to receive new bifold doors in anthracite grey powder coated aluminium. Insert universal beam below inner leaf with bottom plate below outer leaf as designed by Engineer. Head height to remain as existing. Needle & prop around opening as required.

proposed ground floor plan 1:50

* denotes laminated glass to BS 6206 1981 & BS EN 12600:2002

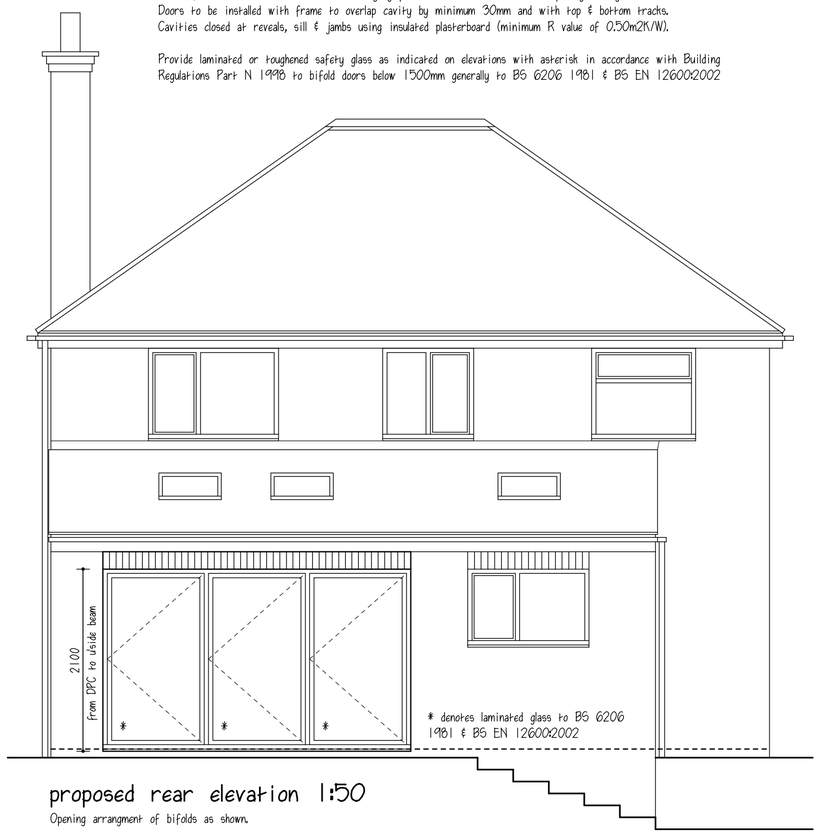

* denotes laminated glass to BS 6206 1981 & BS EN 126002002

proposed rear elevation 1:50

Opening arrangment of bifolds as shown.

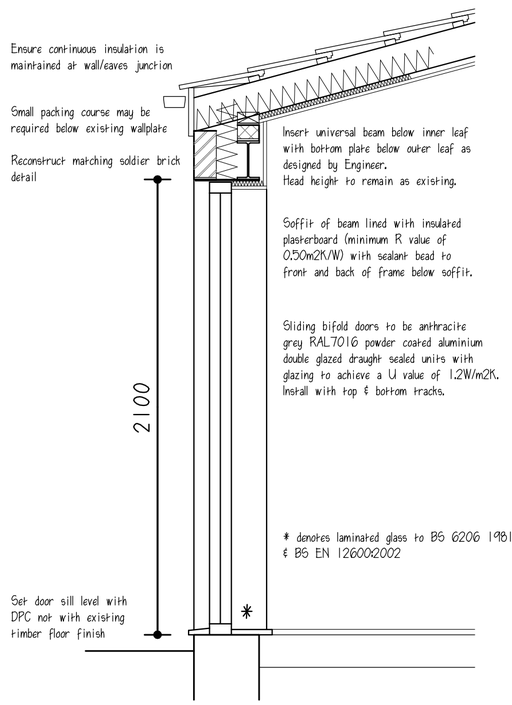

proposed section 1:20

REVISIONS	DATE
A Minor client revisions	29/06/21

CLIENT MR. L MORRIS & MISS. L NAYLOR
ADDRESS 36 HICKTON ROAD SWANWICK
PROJECT PROPOSED ALTERATIONS
DRAWING SURVEY & SCHEME DESIGN
SCALE 1:50 / 1:20 / 1:100 / 1:500 1:1250 at A2
DATE JUNE 2021
DWG No. PA/21-014 SK 81 01 A

PILKINGTON ARCHITECTURE
29A STRETTEA LANE
HIGHAM
ALFRETON
DERBYSHIRE
DE55 6EJ
Tel : 01773 843333
jon@pilkington-architecture.co.uk

This drawing is copyright.
Contractors must check all dimensions on site, working only from grid & figure dimensions.
Discrepancies must be reported to the designer before work is done.