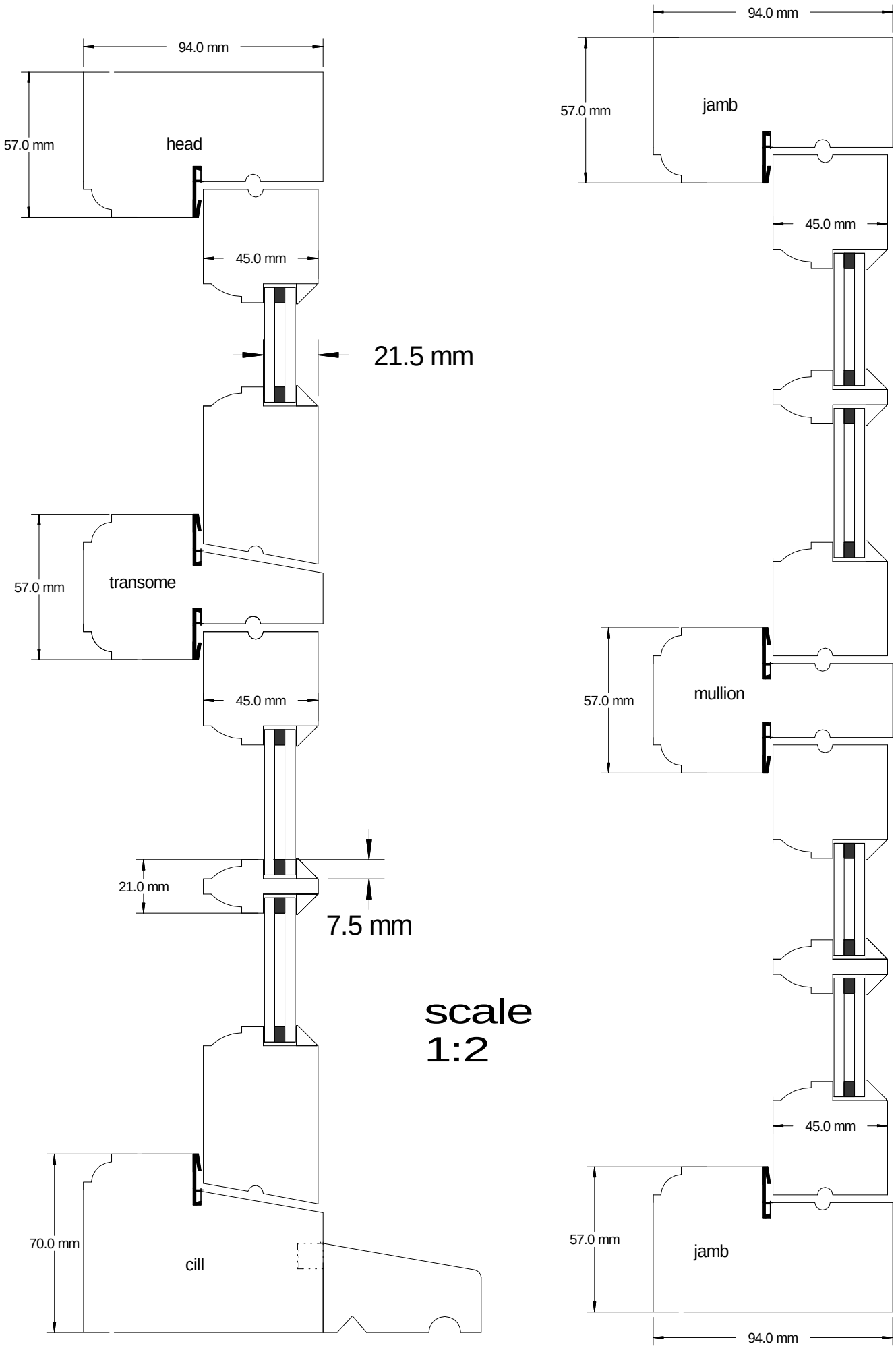

scale
1:2

PDF created with pdfFactory Pro trial version www.pdffactory.com