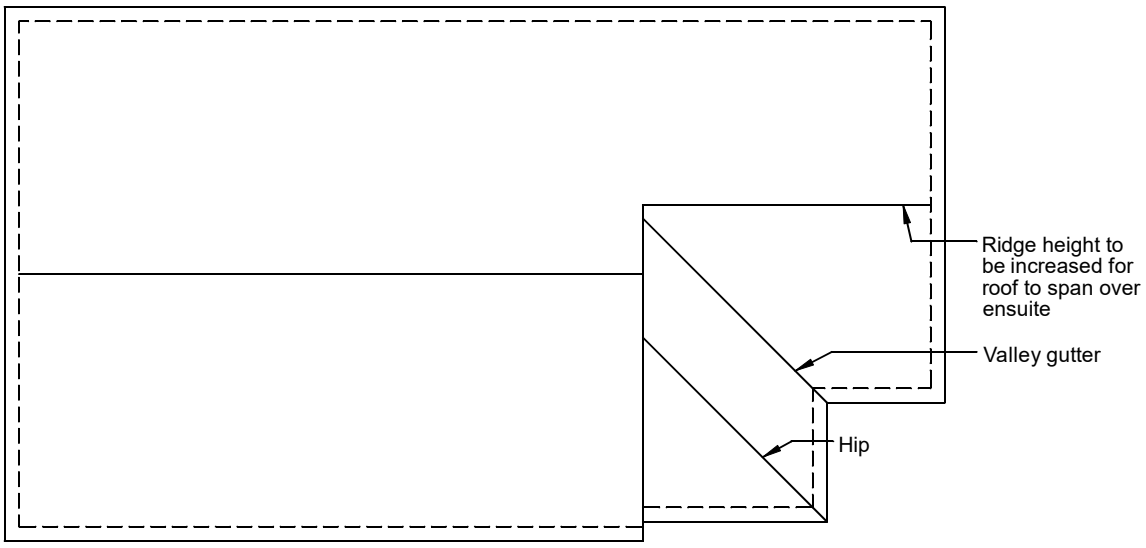

ROOF PLAN

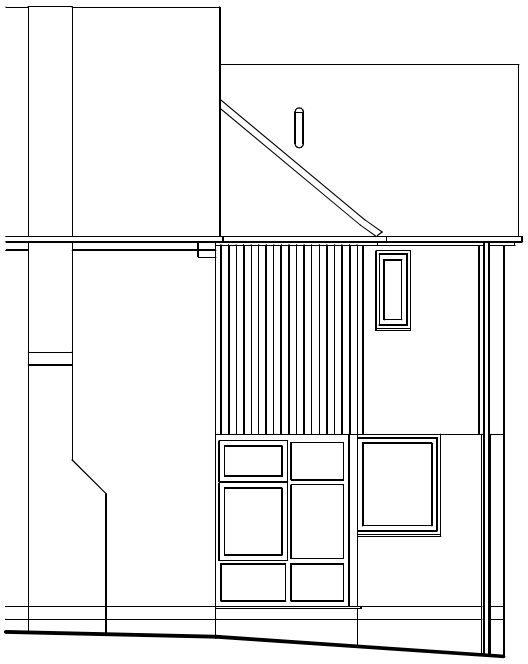

SIDE ELEVATION

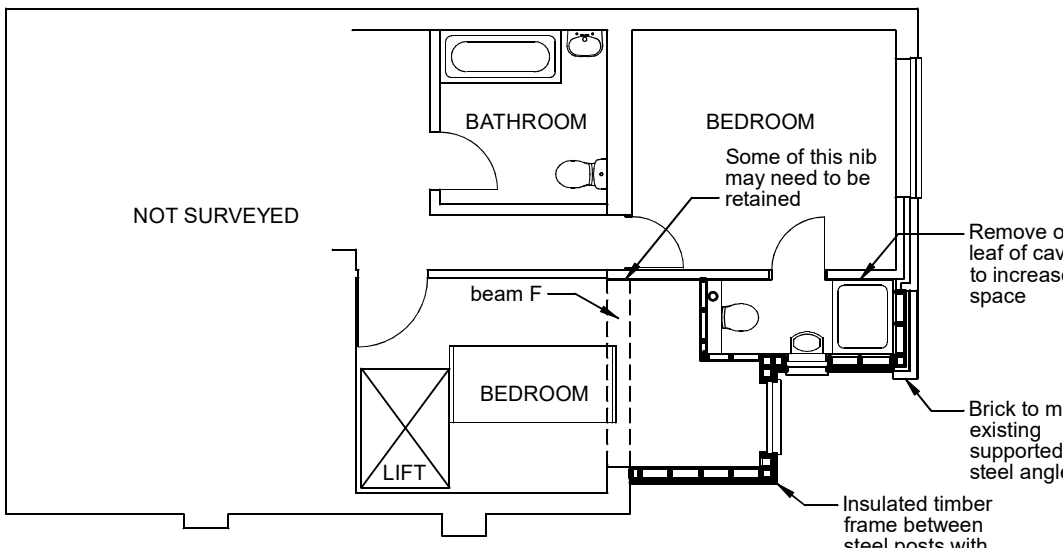

FIRST FLOOR PLAN



REAR ELEVATION

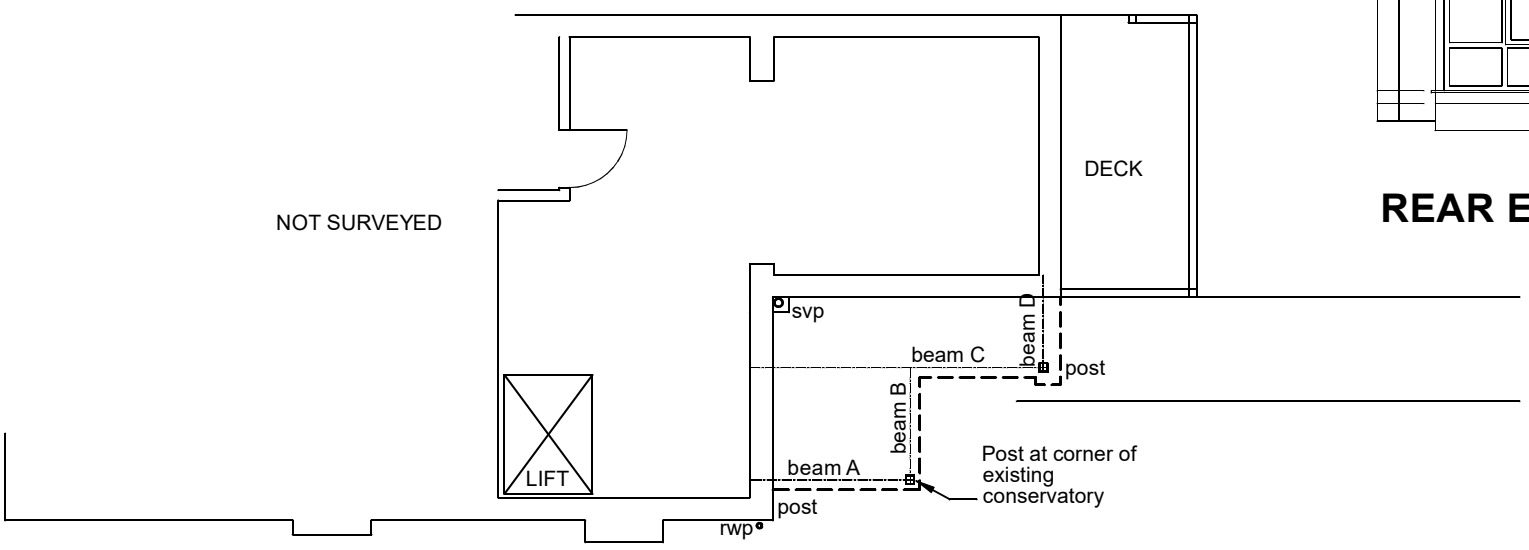

STEEL BEAM PLAN

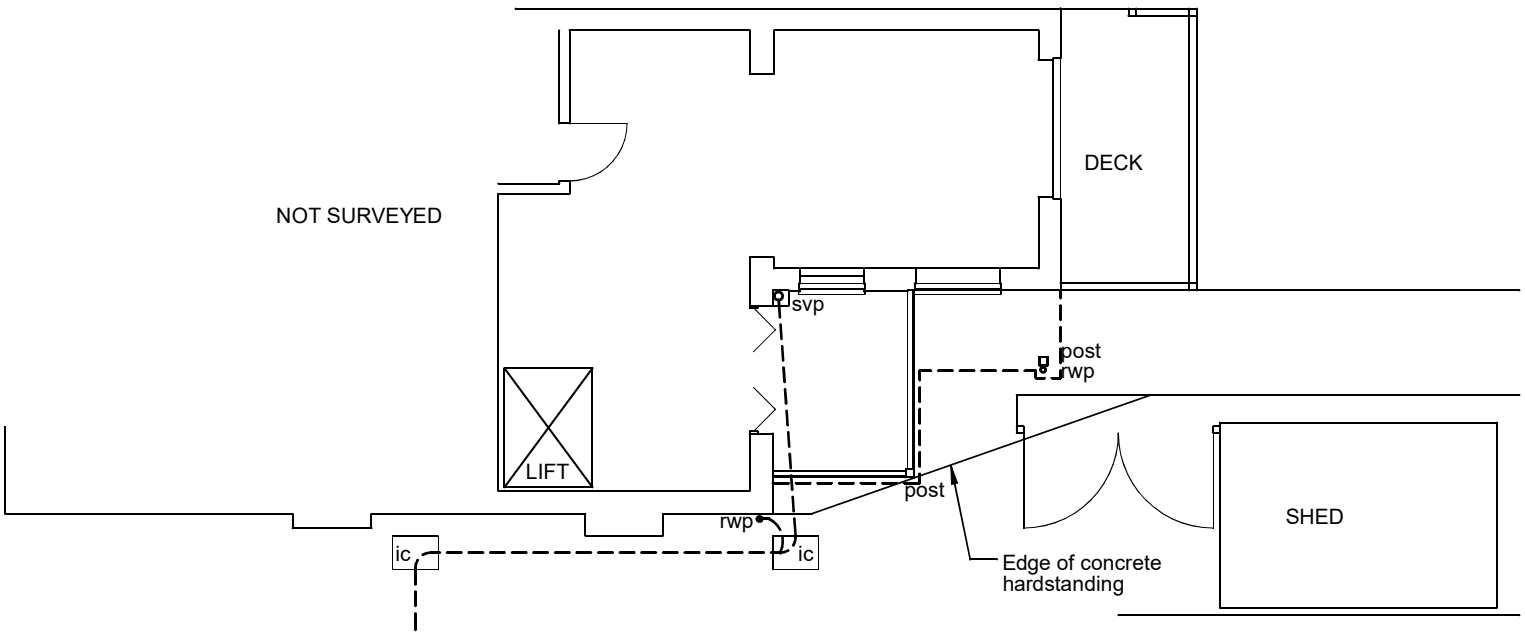

GROUND FLOOR PLAN

REV	DATE	BY	DESCRIPTION

DARREN MAYNER ARCHITECTURE	54 ROWTHORNE AVENUE SWANWICK ALFRETON DE55 1RZ 01773 602082 www.mayner-architecture.co.uk	PROPOSED EXTENSION TO 46 BAKERS HILL HEAGE BELPER	FLOOR PLANS AND ELEVATIONS AS PROPOSED (ALTERNATIVE 4)	DRAWN DM	DATE 7-7-2021
				SIZE A3	SCALE 1:100
				NO. DMA-096-007	REV