SECTION "A-A"

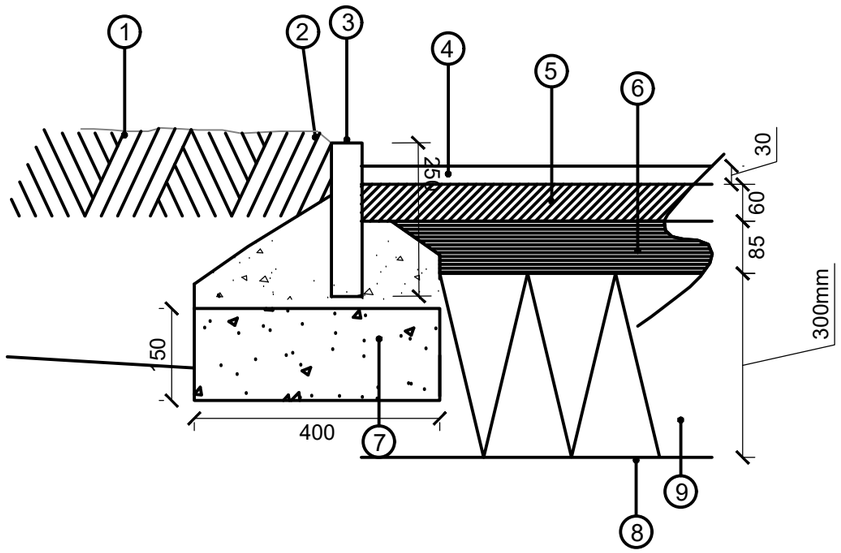

1. Existing vegetation & seeding to make good.
2. Make up adj topsoil to 25mm above kerb.
3. 50 x 250mm precast concrete flat top edging .
4. Medium textured asphalt concrete surface course (0/10mm aggregate) as specified.
5. Dense asphalt concrete binder course (0/20mm aggregate) as specified.
6. Dense asphalt concrete base (0/32mm aggregate) as specified.
7. Gen 3 concrete foundation and haunching.
8. Well compacted formation level.
9. Highways Agency type 1 sub-base, as specified.
   Depth subject to CBR % as follows:
   CBR less than 2 = 550mm depth
   CBR 2 = 400mmm depth
   CBR equal or greater than 3 = 300mm depth

NB Size of roller and number of passes required to achieve adequate compaction as specified.
Grass seeding as specified.

© Crown copyright and database rights 2013. Ordnance Survey 100023251

© Derbyshire County Council Copyright: Reproduction in whole or part by any means is prohibited without the prior written permission of the Director of Corporate Resources

Classification
CONTROLLED

Do not scale

Use only written dimensions. All dimensions must be verified prior to the works being put into hand and any discrepancies reported to the originator

Statutory & Regulatory Approvals

Building Regulations Completion Certificate	
Electrical Test Certificate (NIC/EIC or similar)	
Part P Electrical Certificate	
Gas Safe Installation Certificate	
FENSA Certificate	

NB: Following practical completion failure to supply DCC with the correct certificates will delay final payments.

Rev.	Details of Revision	Date	Initial

Derbyshire County Council
Commissioning, Communities and Policy
Property
Chatsworth Hall, Chesterfield Road,
Matlock, Derbyshire DE4 3FW
Tel. (01629) 536219 Fax. (01629) 536266

Partner Details

Project
9 Danesby Rise
Denby
DE5 8RG

UPRN Number

Drawing Number	Revision
1153131-WD-003	

Title
Hardstanding
Cross Section Detail
and
Specification

Scale	Drawn	Checked
1:10	LM	
Original Size	**Date**	**Date**
A3	01/07/2021	

Status