ADDENDUM 1

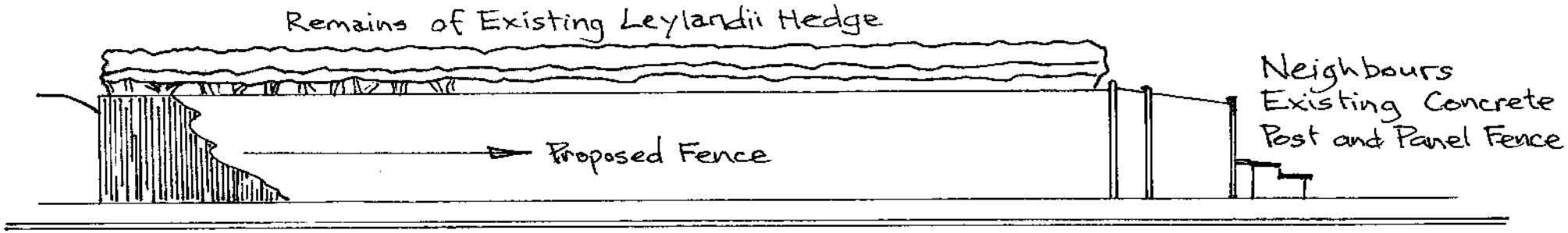

FRONT ELEVATION OF PROPOSED FENCE ON S. BOUNDARY OF 13 LARKHILL Scale 1:100

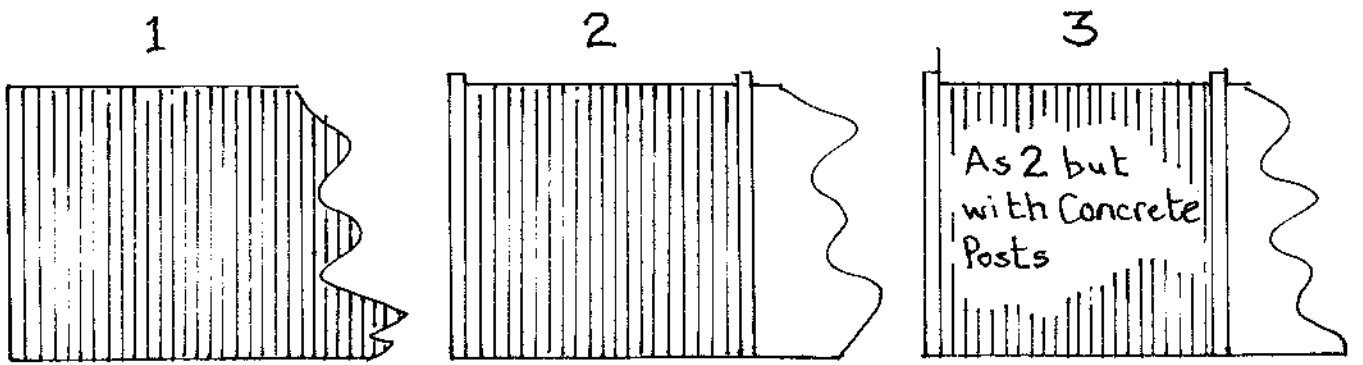

TYPE OPTIONS FOR CLOSE BOARDED FENCING Scale 1:50

1 Continuous Feather Board Fence on 100 Square Treated Wooden Posts and Battens.

2 Feather Boarded Panels (1800×1800) Between Wooden Posts

3 As 2 but Using Concrete Posts as per Neighbours