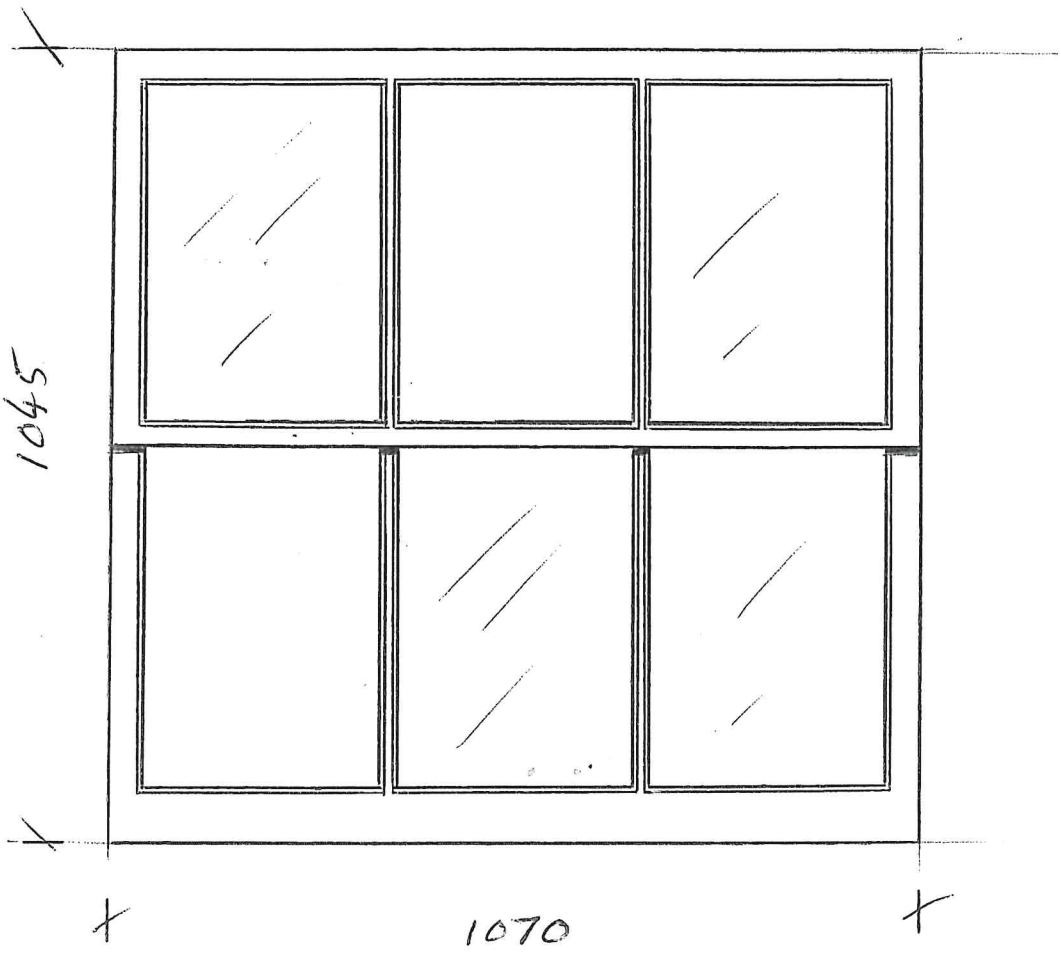

FRONT ELEVATION

PROPOSED REPLACEMENT
SLIDING SASHES.
SCALE 1:10

GLAZING BAR DETAIL

SCALE 1:1

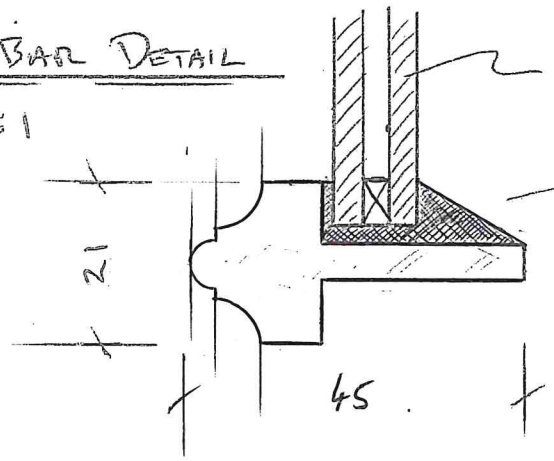

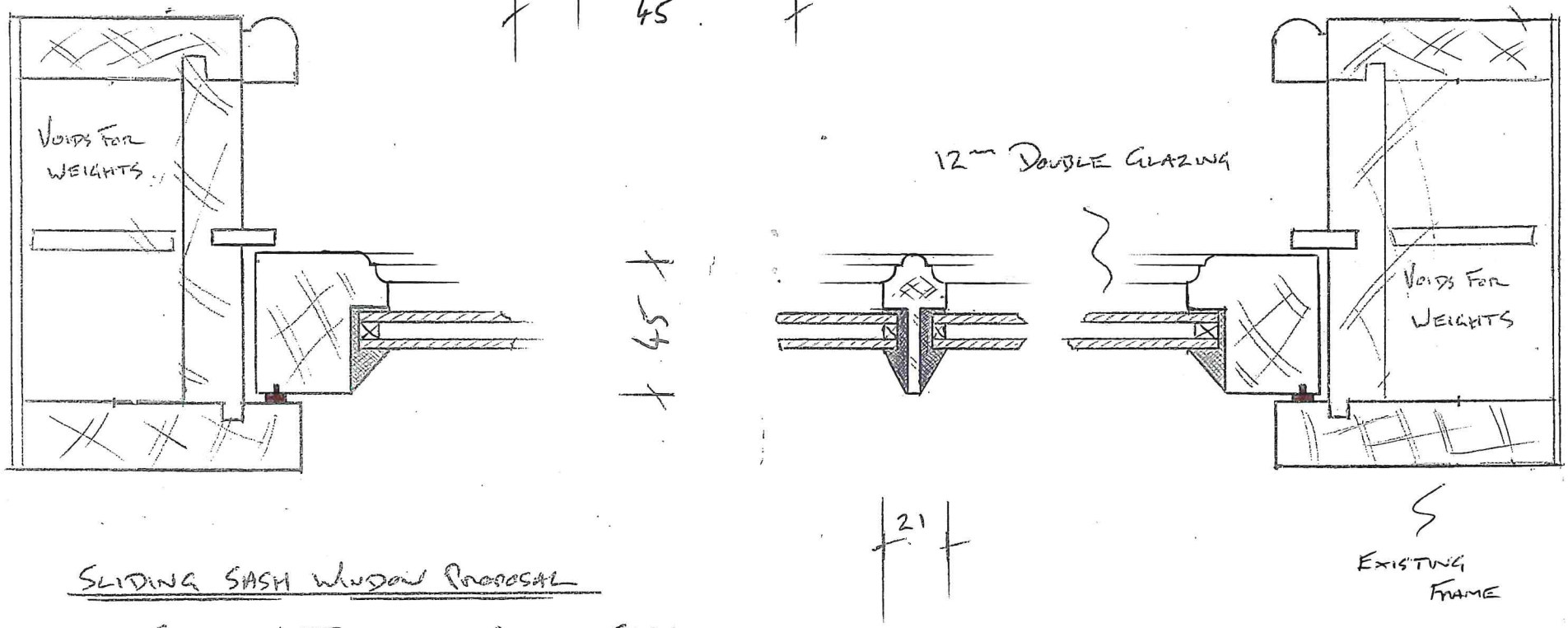

SLIDING SASH WINDOW PROPOSAL

- SECTION THROUGH UPPER SASH. AND EXISTING FRAME.
- SCALE 1:2.

EXISTING
HEAD + JAMB
BOX SECTION

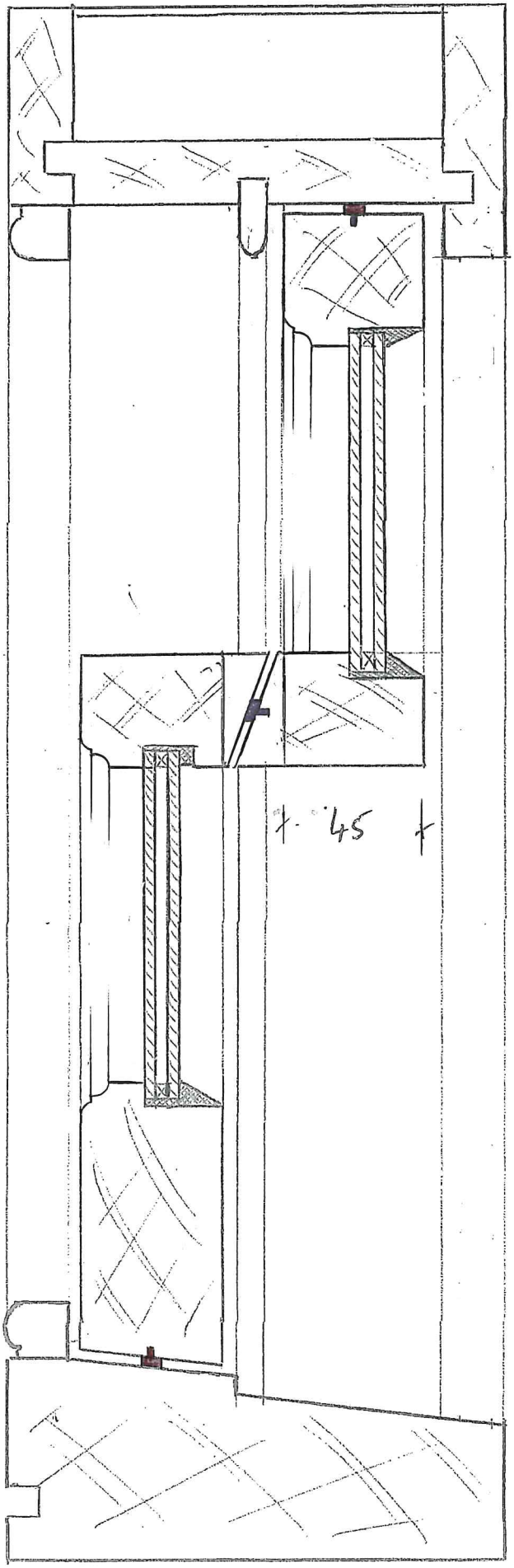

44 TOP RAIL
+ STILES

MEETING RAILS.

BOTT RAIL.

EXISTING
CILL.