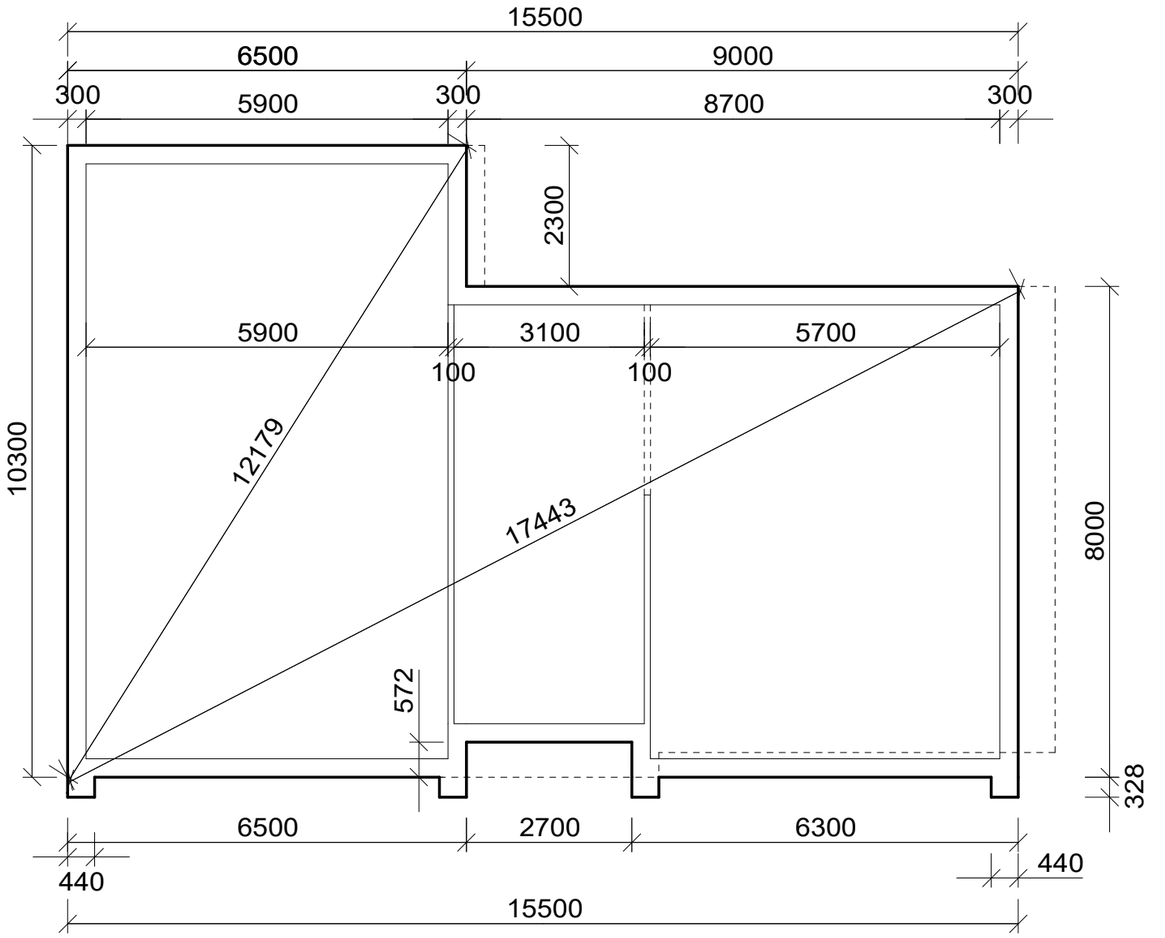


**AS PROPOSED**

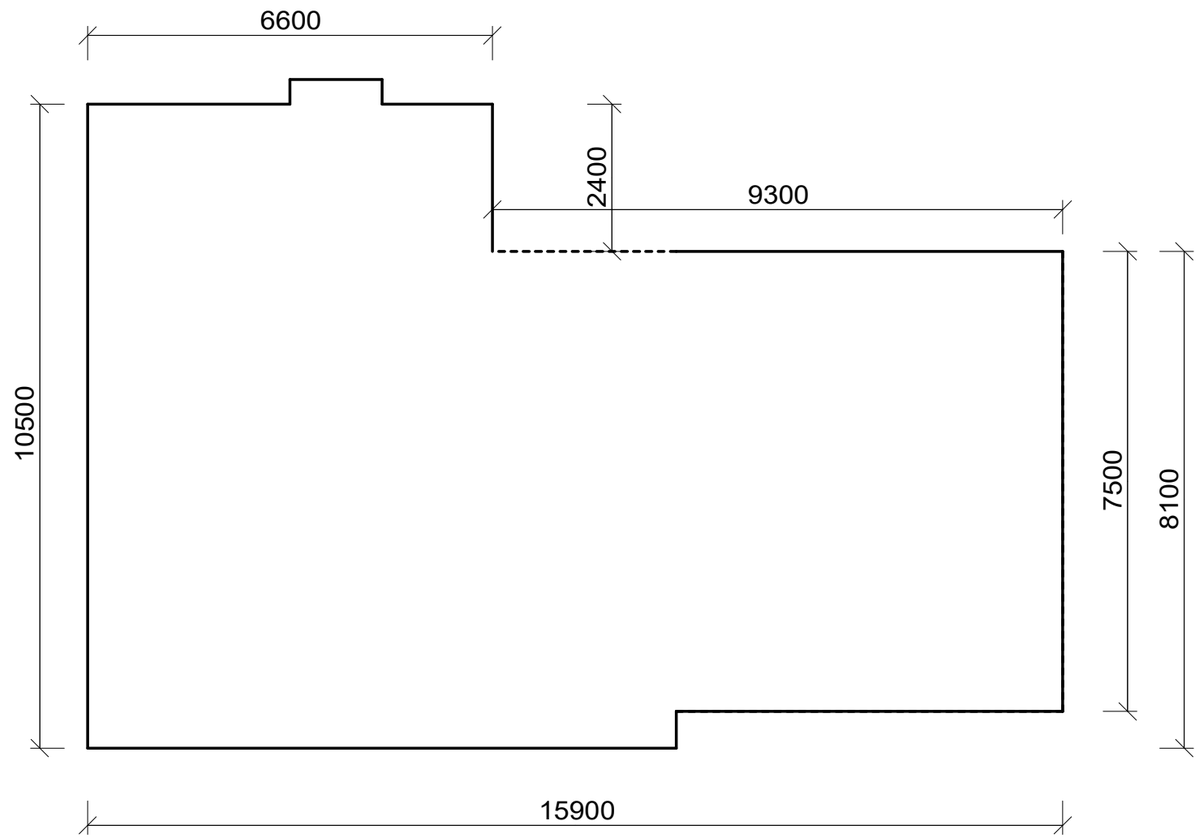


**AS APPROVED**

**OVER LANE**
**HAZELWOOD**
**SETTING OUT 1:100**