RE: Quotation & Drawings (Virtual Showroom Tour)

AVA/2021/1218

Good morning Mrs Kinsley,
Apologises for the delay in responding. I have looked at the original quotation and you were quoted 18mm Flush Casements. I can get the sectional drawings for these but wondered if you had considered the Listed versions. They offer a 14mm slim double glazed unit which the planners may like or the single glazed version.
I have attached the sectional drawings for the 18mm and 14mm units.
Hope this is helpful.
Kind Regards

Donna Gillott
Customer Service Administrator

DERWENT WINDOWS & DOORS

AVA/2021/1218

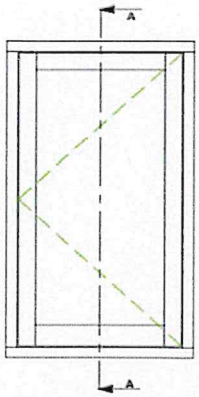

TYPICAL CASEMENT LAYOUT

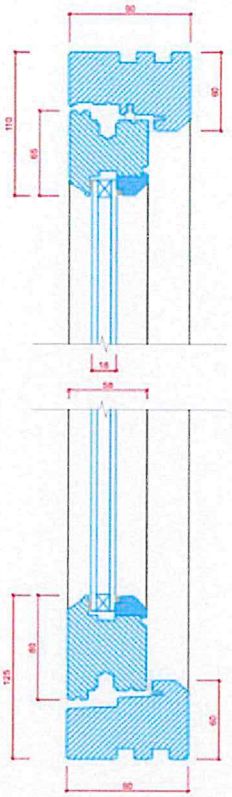

CASEMENT CROSS SECTION 'A-A'

TIMBER WINDOWS

TOLERANCES

PRODUCT RANGE: FLUSH CASEMENT (Bevel) 18mm Unit

TITLE: VERTICAL SECTION DETAIL - TOP AND BOTTOM RAIL

DRAWN BY: FR | DATE DRAWN: 01/06/2019 | SCALE: 1:2, 1:10

ALL MEASUREMENTS ARE FINISHED DIMENSIONS IN MM | DO NOT SCALE DRAWING

AVA/2021/1218

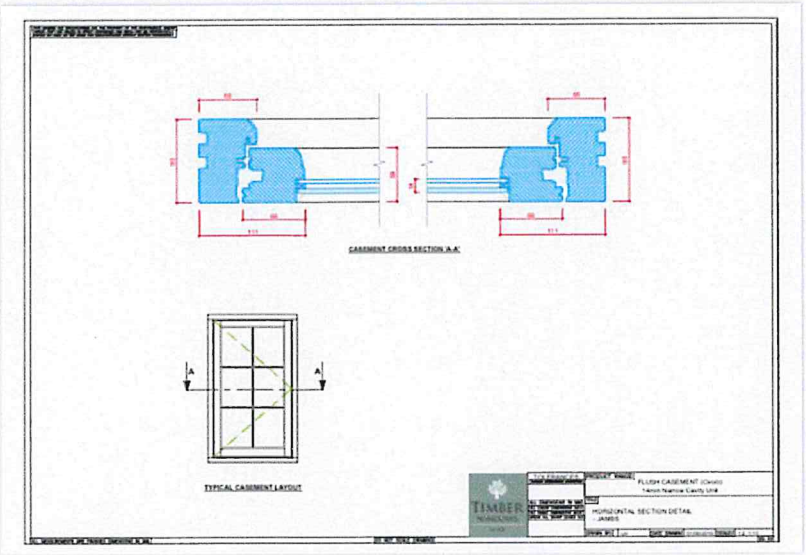

AVA / 2021 / 12

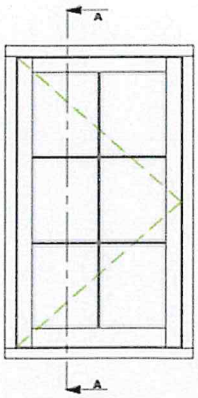

TYPICAL CASEMENT LAYOUT

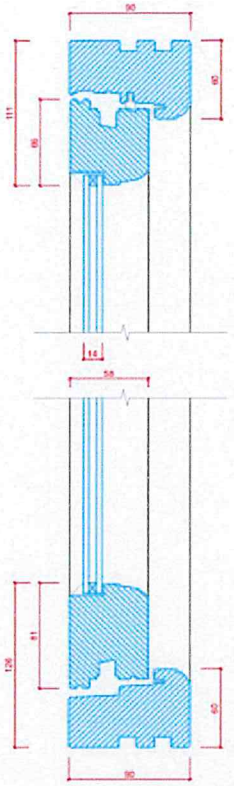

CASEMENT CROSS SECTION 'A-A'

TIMBER WINDOWS

TOLERANCES
UNLESS STATED OTHERWISE

ALL DIMENSIONS IN MM
ALL LINEAR DIMENSIONS ±0.5
ALL ANGULAR DIMENSIONS ±0.5°
BREAK ALL SHARP EDGES 0.5

PRODUCT RANGE:
FLUSH CASEMENT (Ovolo)
14mm Narrow Cavity Unit

TITLE:
VERTICAL SECTION DETAIL
- TOP AND BOTTOM RAIL

DRAWN BY: LH
DATE DRAWN: 01/08/2019
SCALE: 1:2, 1:10

ALL MEASUREMENTS ARE FINISHED DIMENSIONS IN MM
DO NOT SCALE DRAWING

AVA/2021/1218

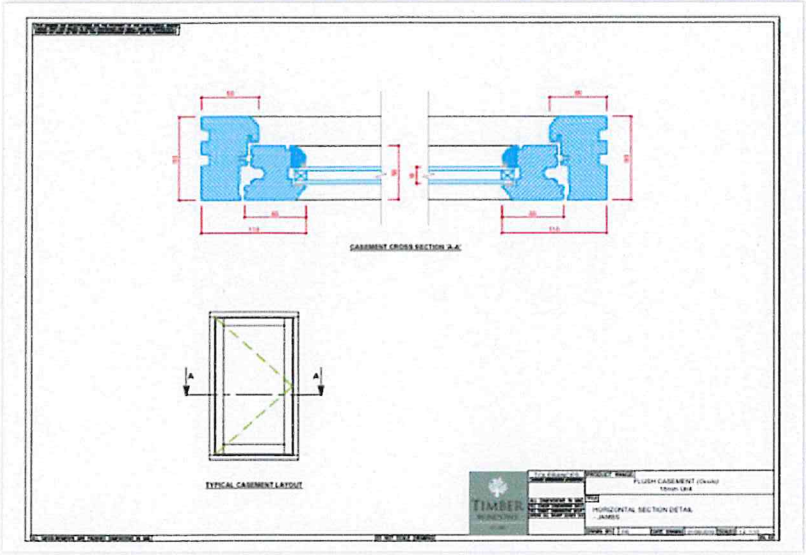

PRODUCTS AT A GLANCE FOR QUOTE REF: 1616/1 V1

TIMBER WINDOWS

1. Flush Casement Window (Kitchen Side) ✓

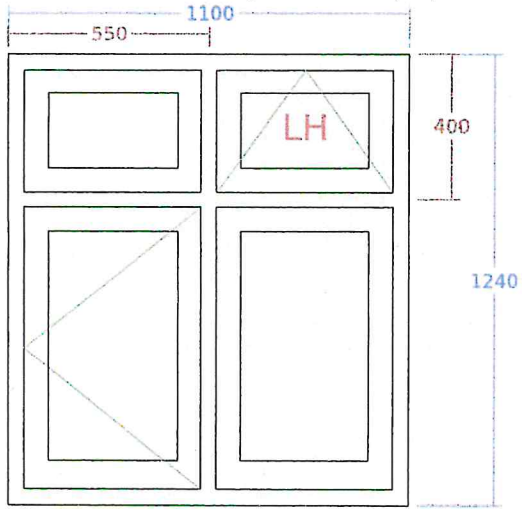

2. Flush Casement Window (Kitchen) ✓

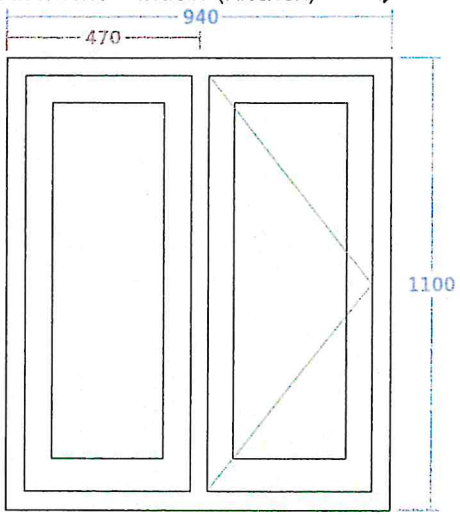

3. Flush Casement Window (Kitchen) ✓

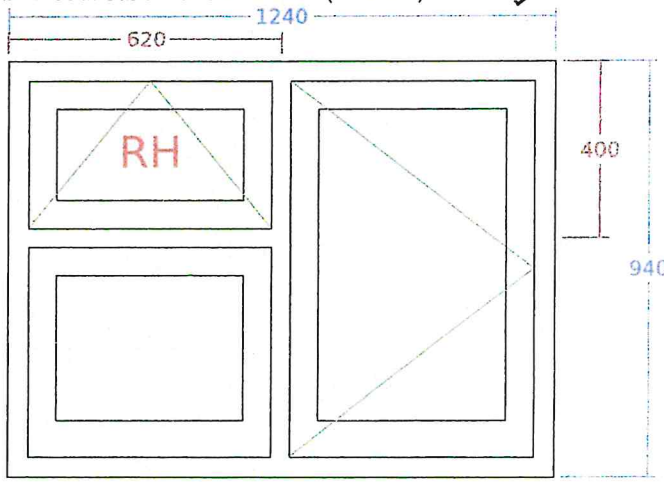

4. Flush Casement Window (Kitchen) ✓

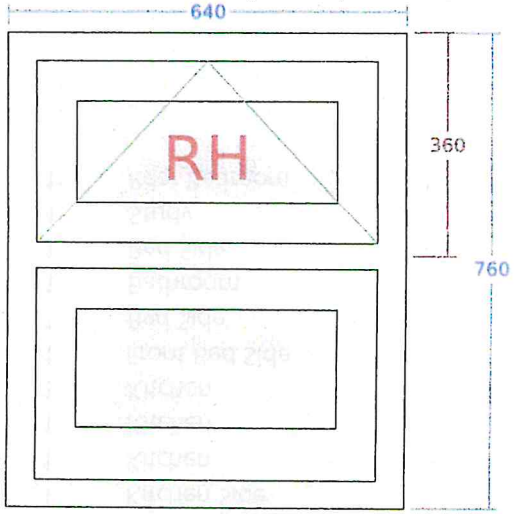

5. Flush Casement Window (Front ~~Bed~~ Side) ✓

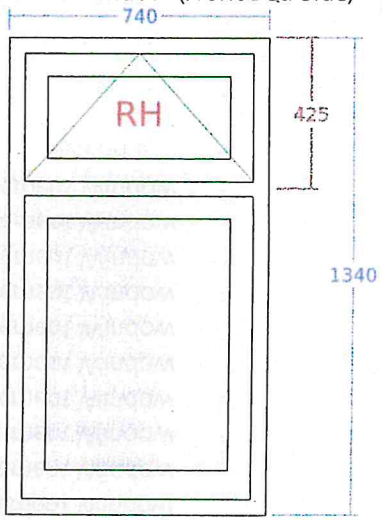

6. Flush Casement Window (Bed Side) ✓

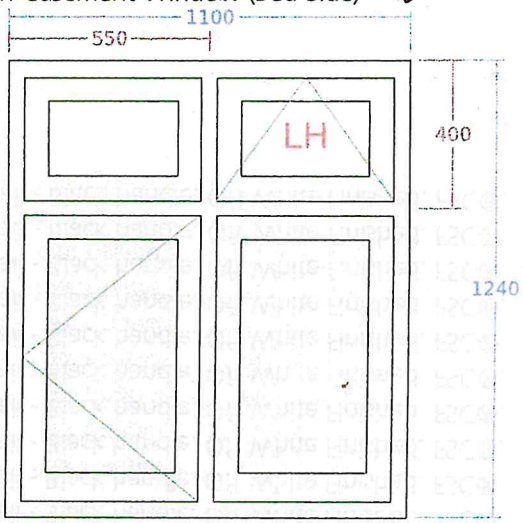

PRODUCTS AT A GLANCE FOR QUOTE REF: 1616/1 V1

7. Flush Casement Window (Bathroom)

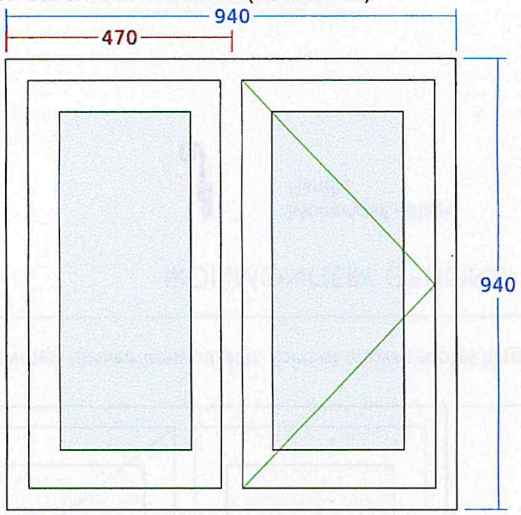

8. Flush Casement Window (Bed Side)

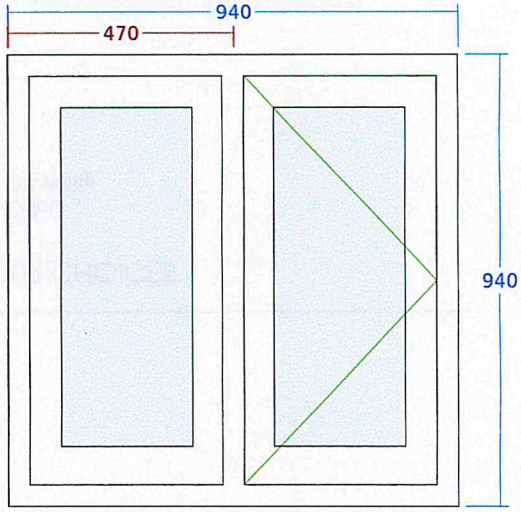

9. Flush Casement Window (Study)

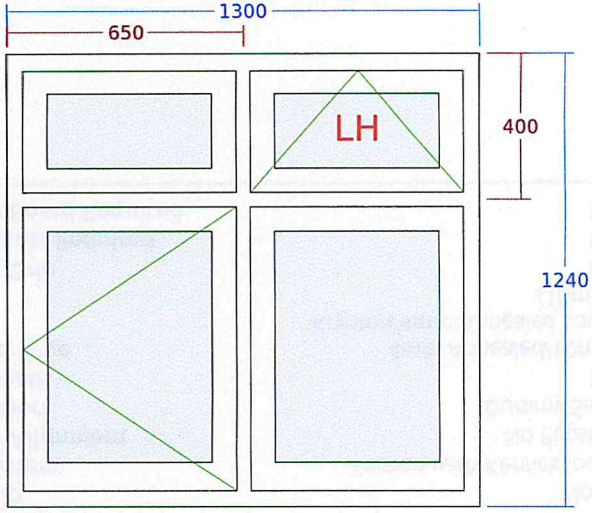

10. Flush Casement Window (Rear Bedroom)

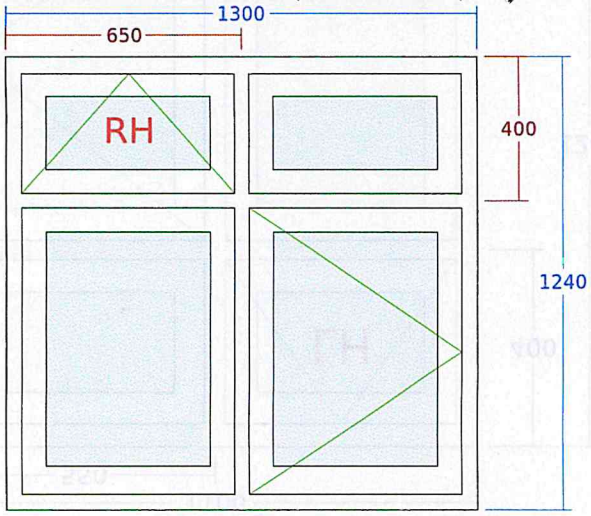

22/12/08
D1

AVA/2021/1218

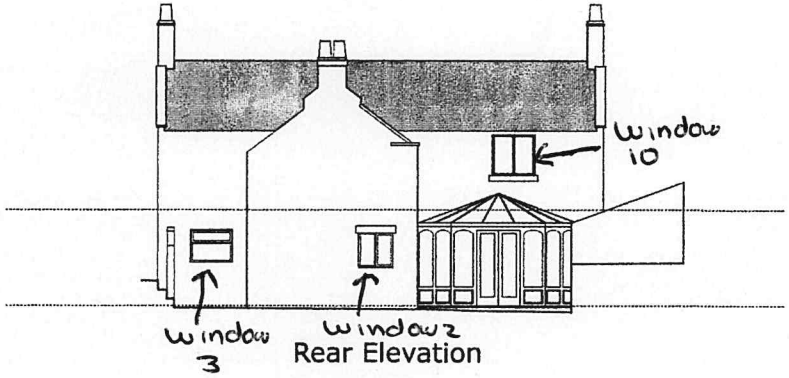

Rear Elevation

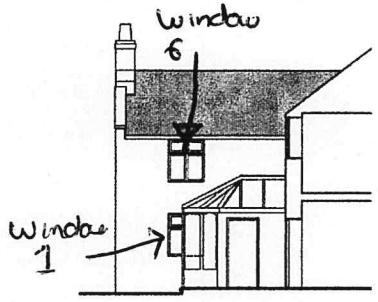

section AA

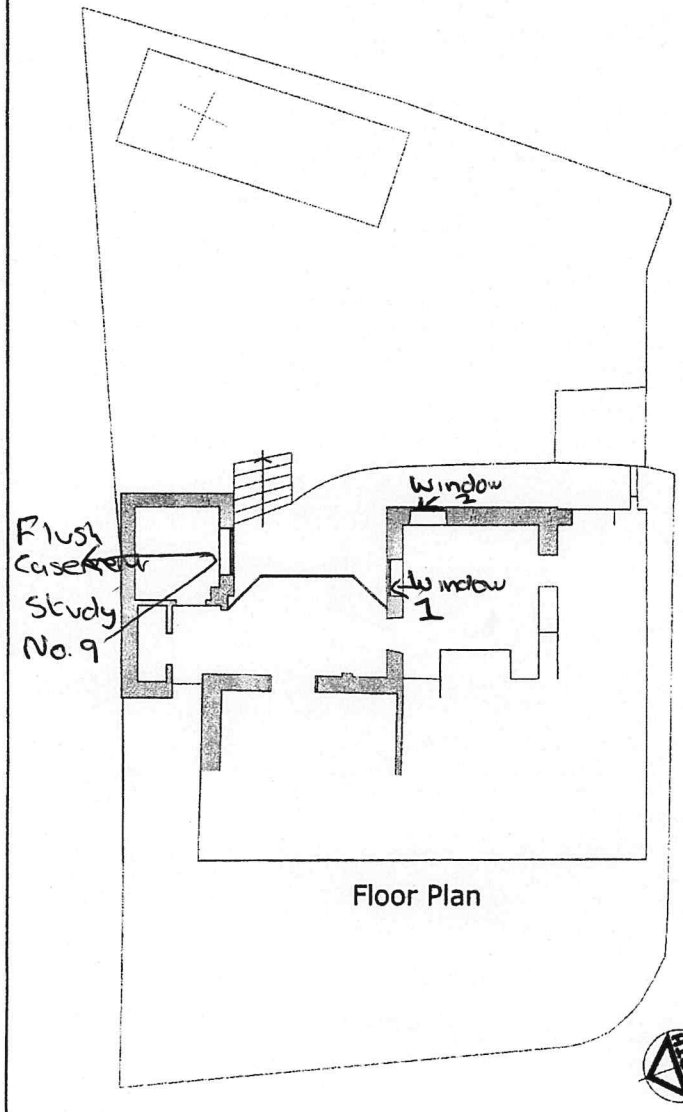

Floor Plan

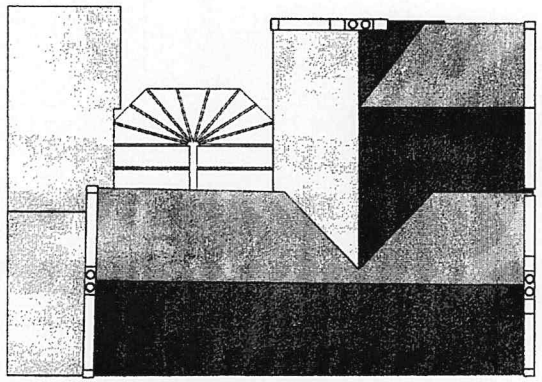

Roof Plan

RECEIVED 19 DEC 2008

REVISIONS	BY	DATE
A roof plan amended	MRH	Dec. 2008

CLIENT
Jane & Mark Kinsley

PROJECT
25 The Fleet, Belper

DRAWING
plans as existing

Bakewell & Partners
chartered architects and town planners
The Studio · Queen Street · Belper · DE56 1NR
telephone: (01773) 822868 e-mail: bakewell@bakewell-and-partners.co.uk

DRAWN	DATE ©
Michael Hetchcote	July 2008
BASE FILE: survey mkd	SCALE: 1:100 SIZE: A2

PLANNING PORTAL NO.	JOB NUMBER	DRAWING NO.	REVISION
PP-00614259	7872	01	A

metres 0 1 2 3 4 5
1.0 0.5 0.0 1:100

22/12/08
D2

AVA/2021/1218

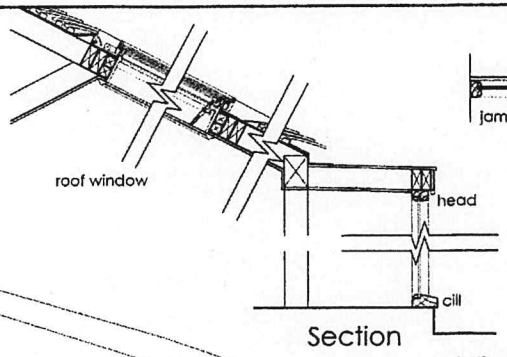

Section



Plan

Window Details 1:20



Rear Elevation

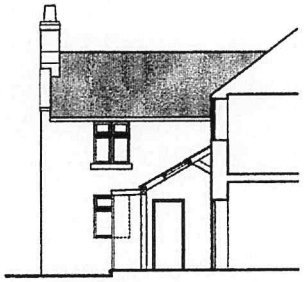

Section AA

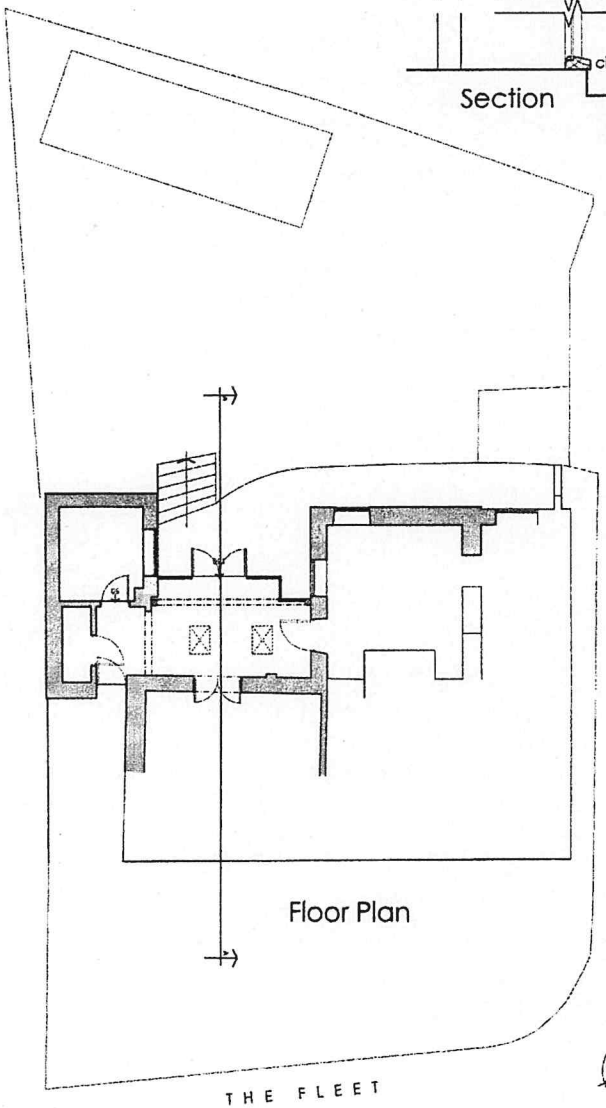

Floor Plan

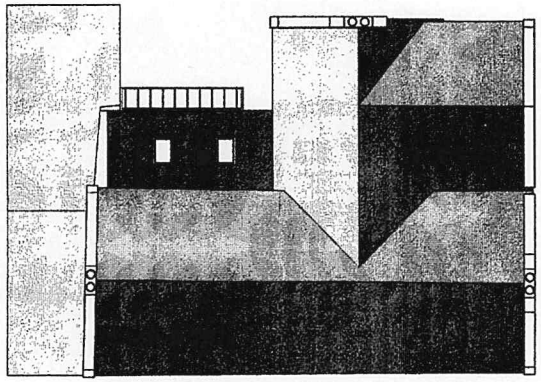

Roof Plan

19 DEC 2008

metres 0 1 2 3 4 5
1:100

B	roof plan amended & window details added	MBH	Dec. 2008
A	revised to client's requirements	MBH	Oct. 2008
REVISIONS		BY	DATE

CLIENT
Jane & Mark Kinsley

PROJECT
25 The Fleet, Belper

DRAWING
plans as proposed

Bakewell & Partners
chartered architects and town planners
The Studio · Queen Street · Belper · DE56 1NR
telephone: (01773) 822888 e-mail: bakewell@bakewell-and-partners.co.uk

DRAWN: Michael Heathcote		DATE © September 2008	
BASE FILE: survey.mkd		SCALE: 1:100	SIZE: A2
PLANNING PORTAL NO.	JOB NUMBER	DRAWING NO.	REVISION
PP-00614259	7872	02	B

AVA/2021/1218



Window 9 will not have section with eatslap

Window 2

AVA/2021/1218



AVA/2021/1218

