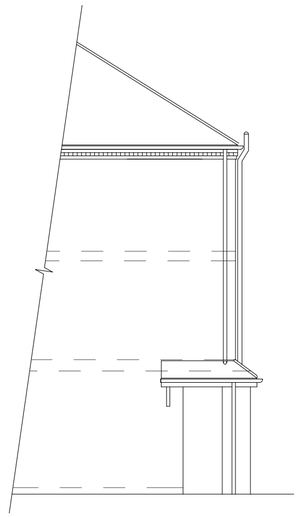

Existing Part Side Elevation
Scale 1: 100 (East)



Existing Rear Elevation
Scale 1: 100 (North)

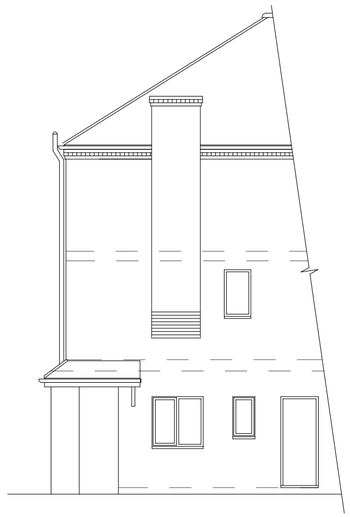

Existing Part Side Elevation
Scale 1: 100 (West)

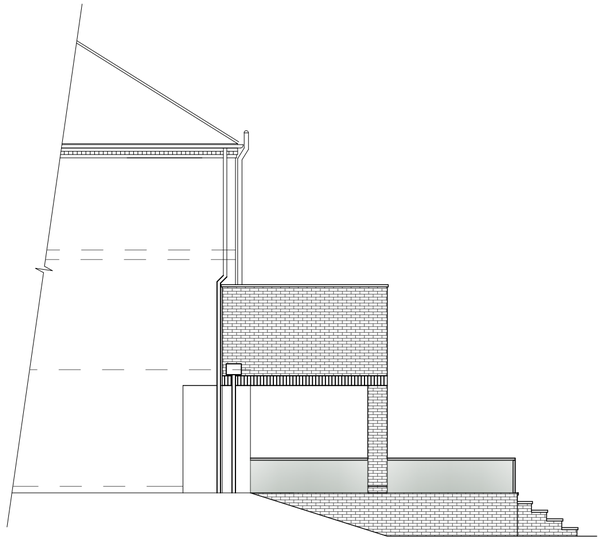

Proposed Part Side Elevation
Scale 1: 100 (East)



Proposed Rear Elevation
Scale 1: 100 (North)

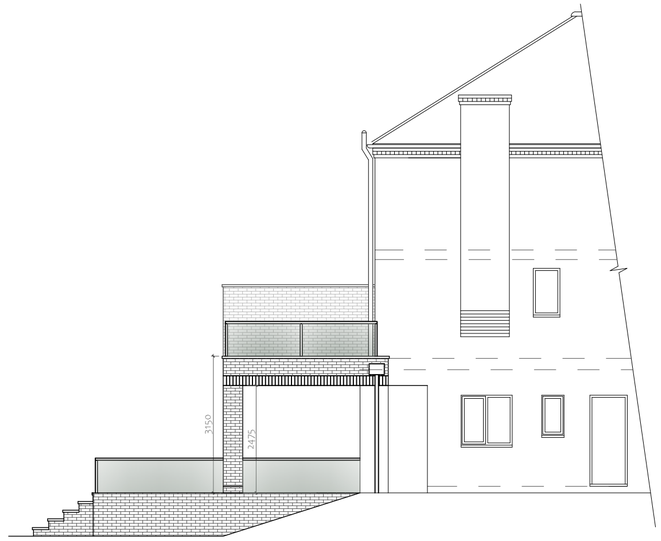

Proposed Part Side Elevation
Scale 1: 100 (West)

DO NOT SCALE:
From this drawing all dimensions are in millimetres unless otherwise stated any discrepancies are to be reported to Lacey & Owen Architectural Services Ltd.

RELEVANT DRAWINGS:
This drawing is to be read in conjunction with all other relevant drawings and details

DRAWING COPYRIGHT:
This drawing and all other relevant drawings is the property of Lacey & Owen Architectural Services Ltd. and should not copied or altered in any way without prior consent

PLANNING ISSUE

Rev	By	Date	Details

PROPOSED
Construction of Balcony to Rear

LOCATION
183B Derby Road
Ripley
Derbyshire
DE5 8HX

CLIENT
Mr Dominic Palterman

DRAWING TITLE
Existing & proposed Elevations

DRAWN BY	DATE	DWG.NO	REV
MO	April 2022	KJ3348/02	-

SCALES @ A2 1:100

139 Bath Street
Ilkeston
Derbyshire
DE7 8AS

LACEY & OWEN
ARCHITECTURAL SERVICES LTD

T: 0115 944 5138
E: enquiry@laceyandowen.co.uk
www.laceyandowen.co.uk

CIAT
REGISTERED PRACTICE

0 1m 5m