SCALE 1:50

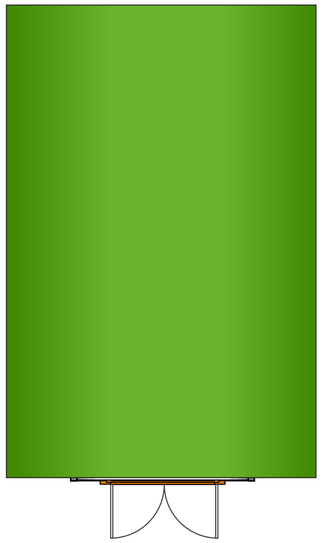

PERSPECTIVE VIEW NOT TO SCALE

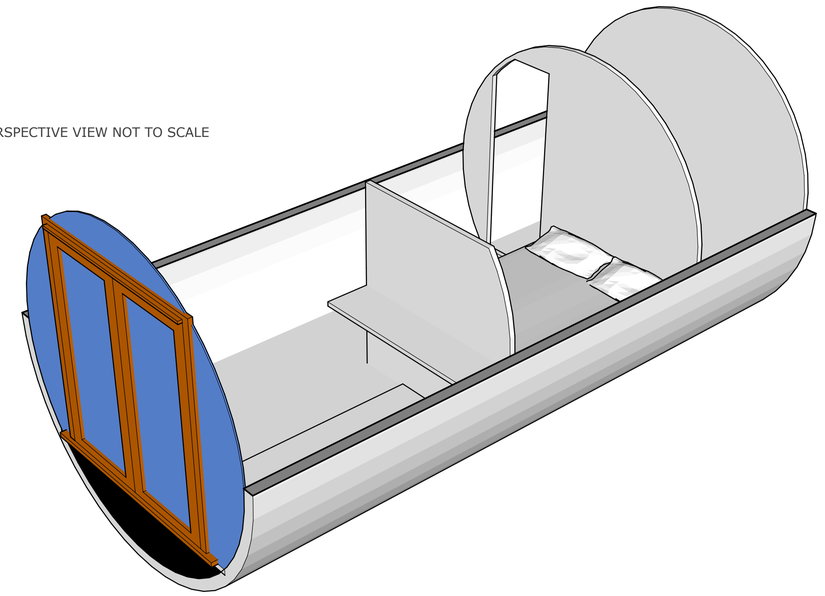

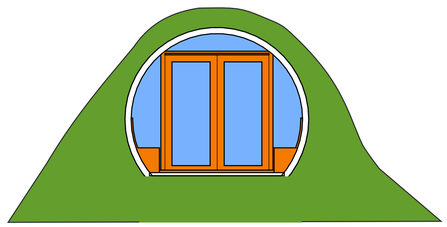

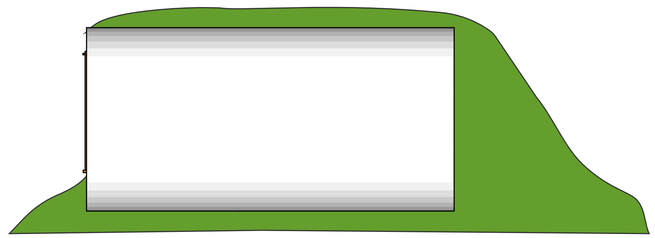

Nick Shier