IF IN DOUBT ASK

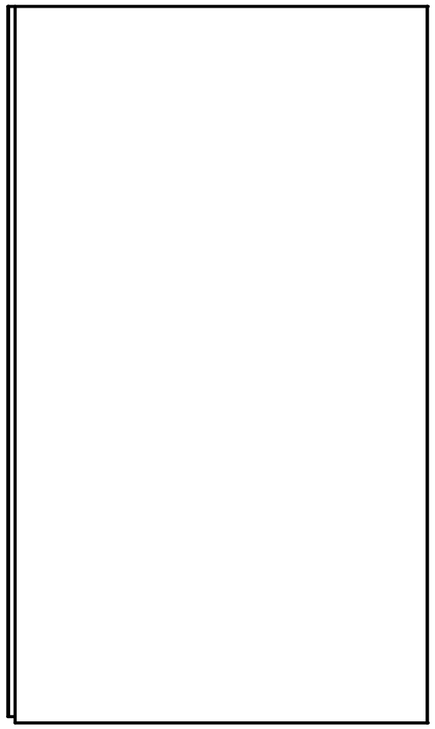

PLAN VIEW

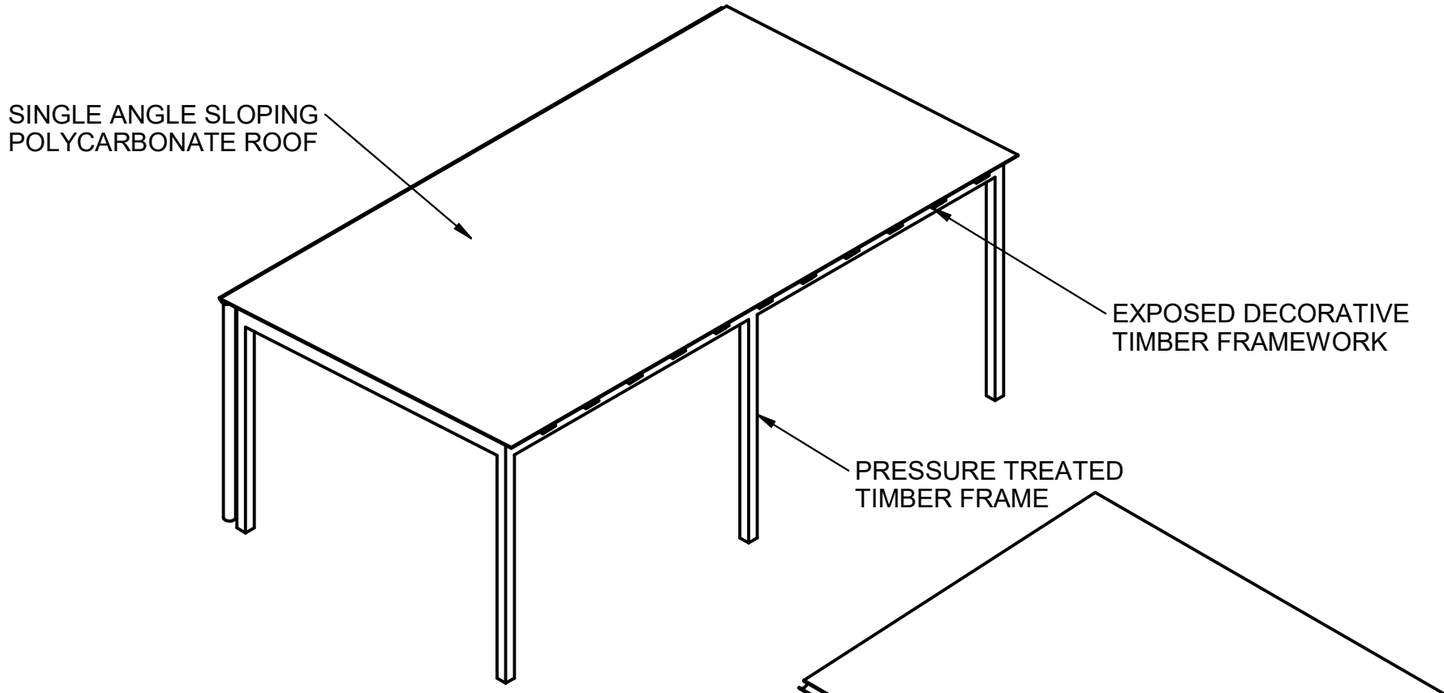


FRONT ISOMETRIC VIEW

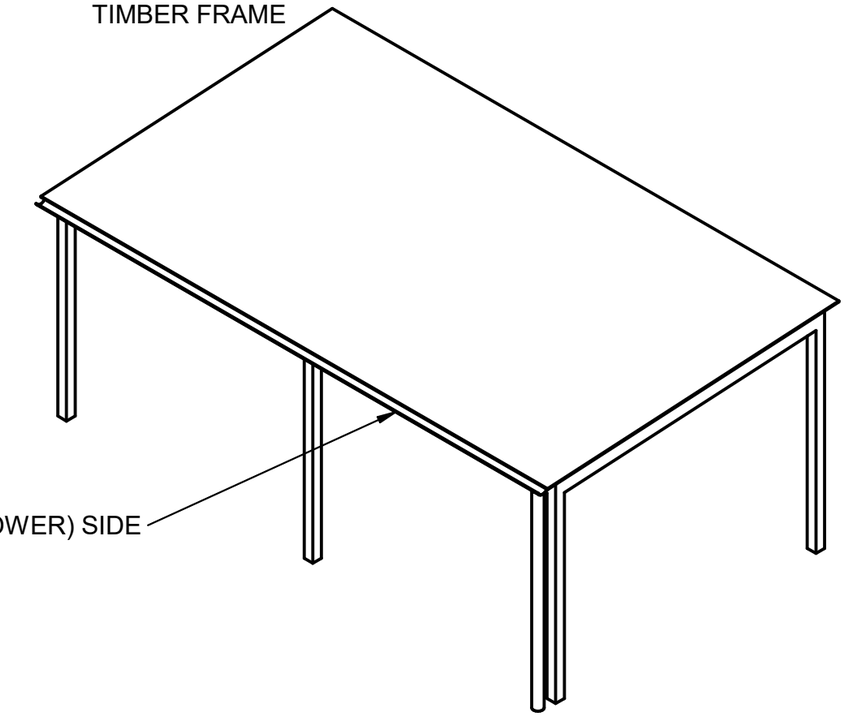


REAR ISOMETRIC VIEW

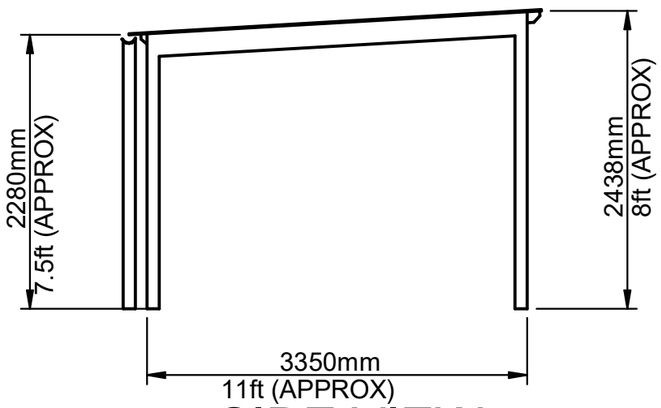


SIDE VIEW

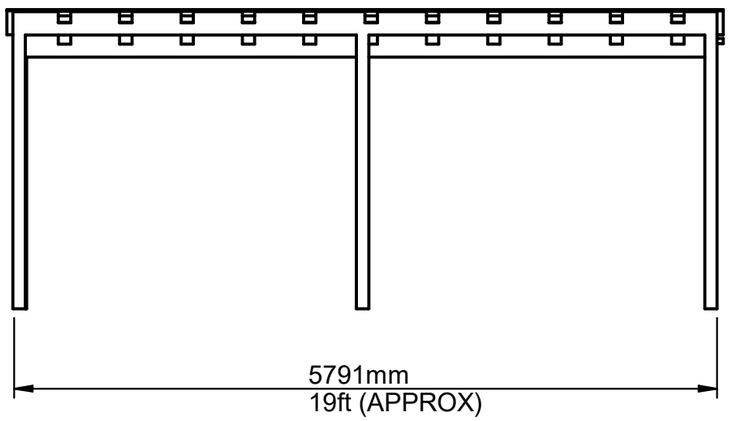


FRONT VIEW

GENERAL NOTES

SIMPLE RECTANGULAR TIMBER FRAME
DECORATIVE EXPOSED ROOF JOISTS
GUTTERING TO REAR (LOWER) SIDE
SINGLE ANGLE SLOPED ROOF TO REAR

| REV | DESCRIPTION | BY | DATE | CHKD. | DATE |
|---|---|---|---|---|---|
| | | | | | |
| | | | | | |
| | | | | | |
| 0 | ISSUED FOR INFORMATION | DM | 22.04.22 | | |

INTERNAL REF. 010422

CLIENT REF. SMALLEY PRE-SCHOOL

| | NAME | DATE |
|---|---|---|
| DRAWN | D.Moss | 22/04/22 |
| CHECKED | | |
| VERIFIED | | |

**GENERAL NOTES**

DO NOT SCALE
REAR COURTYARD SHELTER INSTALLATION

**D Moss Engineering Services**
DERBYSHIRE
TEL : +44 (0) 7834 234682
email : david.moss1983@hotmail.com

TITLE
SMALLEY PRE-SCHOOL
EXISTING PROPERTY DRAWING

SIZE A3 | DWG NO DWG-010422-4 | REV 0

FILE NAME: Smalley Preschool Planning Applicaiton April 2022a.dft

SCALE: 1:50 | DIMS : mm