IF IN DOUBT ASK

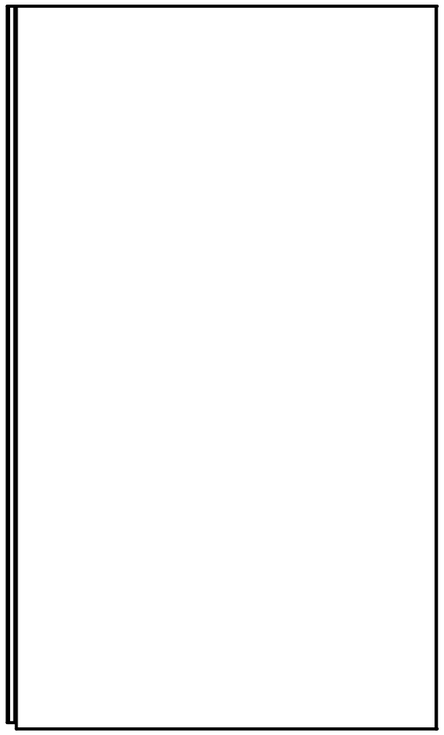

PLAN VIEW

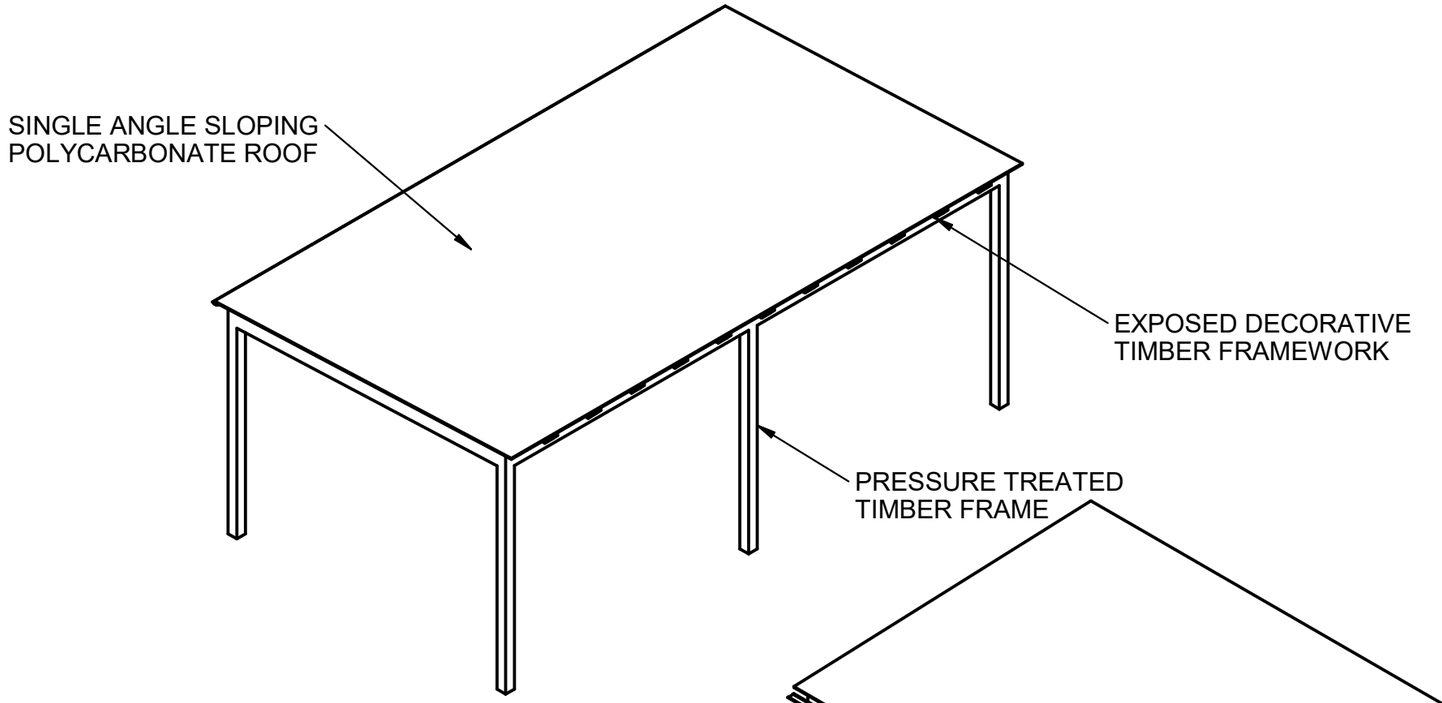

FRONT ISOMETRIC VIEW

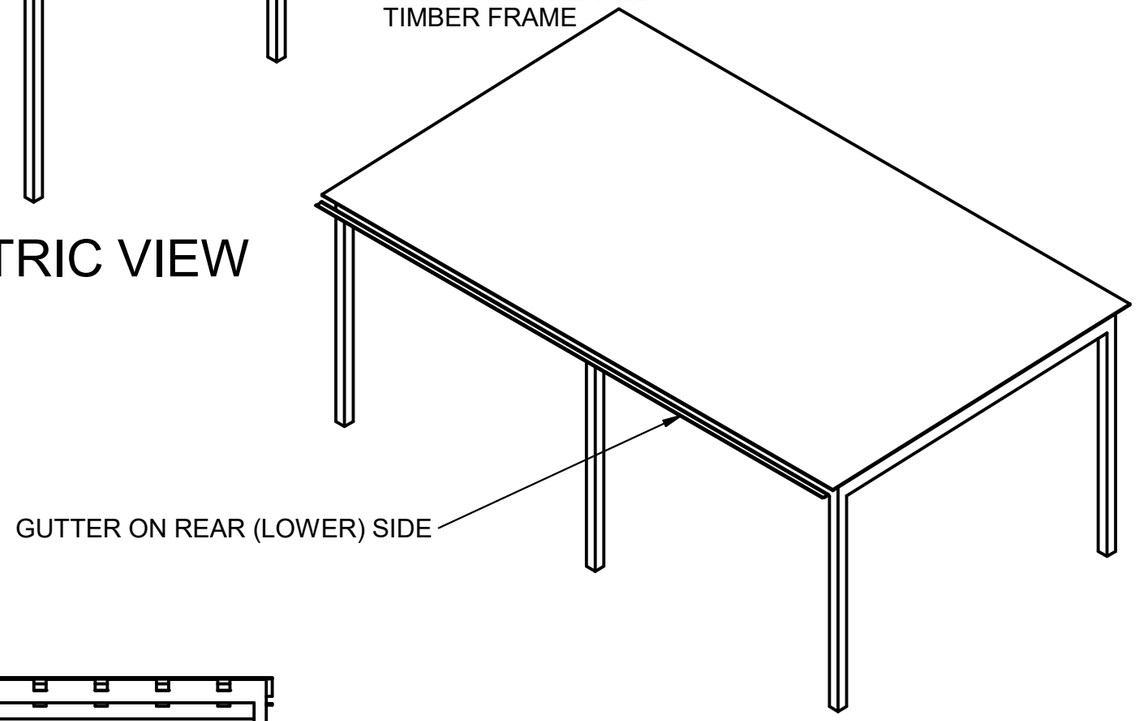

REAR ISOMETRIC VIEW

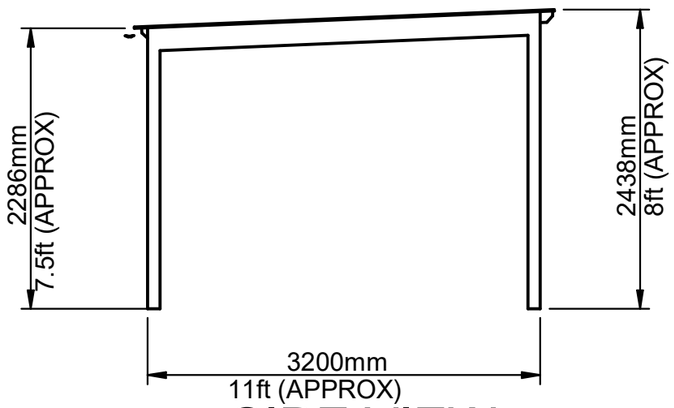

SIDE VIEW

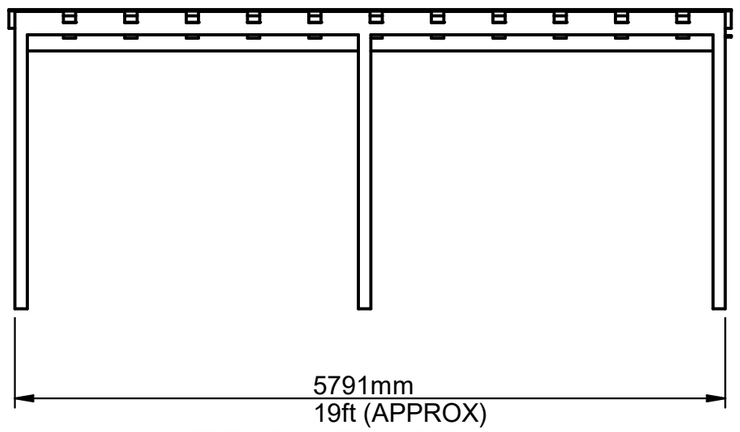

FRONT VIEW

GENERAL NOTES

SIMPLE RECTANGULAR TIMBER FRAME
DECORATIVE EXPOSED ROOF JOISTS
GUTTERING TO REAR (LOWER) SIDE
SINGLE ANGLE SLOPED ROOF TO REAR

REV	DESCRIPTION	BY	DATE	CHKD.	DATE
1	BORDER / SCALE CHANGE	DM	25.04.22		
0	ISSUED FOR INFORMATION	DM	22.04.22		

INTERNAL REF.	010422
CLIENT REF.	SMALLEY PRE-SCHOOL

	NAME	DATE
DRAWN	D.Moss	22/04/22
CHECKED		
VERIFIED		

GENERAL NOTES

DO NOT SCALE
REAR COURTYARD SHELTER INSTALLATION

D Moss Engineering Services
DERBYSHIRE
TEL : +44 (0) 7834 234682
email : david.moss1983@hotmail.com

TITLE
SMALLEY PRE-SCHOOL
SHELTER DETAIL DRAWING

SIZE	DWG NO	REV
A3	DWG-010422-4	1

FILE NAME: Smalley Preschool Planning Applicaiton April 2022a.dft

SCALE: 1:50 | DIMS : mm