Notes:-

1. This Drawing Is For Dimensional Information Only, It Is Essential That This Drawing IS Read In Conjunction With The Installation Guidelines Supplied With The Unit. (Copies Available From Our Sales Department).
2. All Pipe Connections Are Ø110mm PVCu.
3. Pumped Outlet = Ø50mm MDPE
4. All Units Require Appropiate Cover & Frame To Suit Site Loadings (Standard Cover Supplied).
5. Blower Assembly Mounted Externally Within 10m OF Treatment Plant.
6. Ø160mm Inlet Option Is Available By External Adaptor Only.

Unit Dimension Chart								
Unit	DIM 'A'	DIM 'B'	DIM 'C'	DIM 'D'	DIM 'E'	DIM 'F'	DIM 'G'	Unit Weight (kg)
P025P10A0K	1000	665	1615	1950	2615	2755	600	320kg
P025P10C0K	1000	665	1615	1950	2615	2755	600	320kg
P025P15A0K	1500	665	1615	2450	3115	2755	600	420kg
P025P15C0K	1500	665	1615	2450	3115	2755	600	420kg

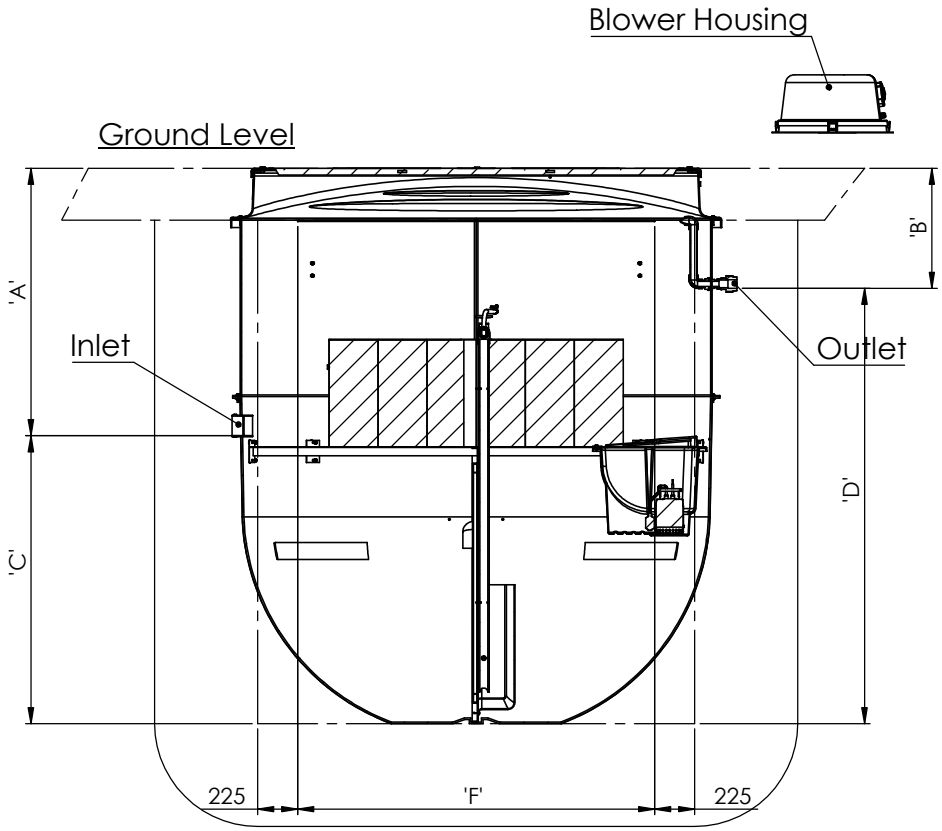

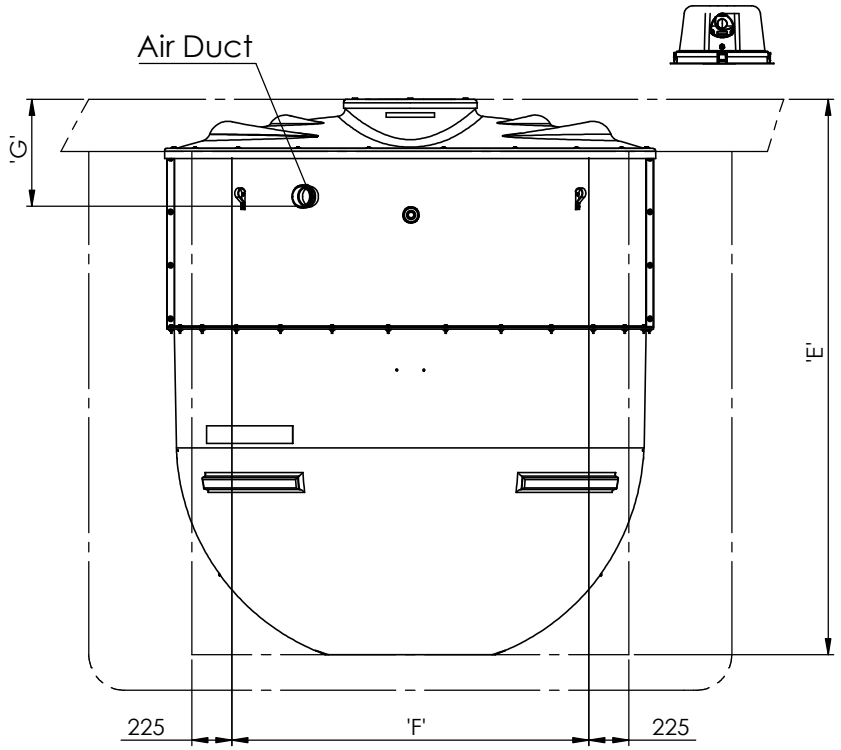

Please Check with Kingspan Environmental For The Latest Issue Of This Drawing				
Issue	Date	Drawn by	Approved by	Description
06	05.11.19	Viaasan K		CC1505 - Amended Unit Weights
05	22/12/15	L.Steward		CC1279 - Redrawn In Solidworks

All Dimensions In mm

Scale: Do Not Scale

Third Angle Projection

Z:\Drawing Data\02 - Sales Drawings\DS\DS - 06\DS0666P

Material : Various	Tolerance (unless stated) :
Finish :	Thickness : n/a
Weight : 2843.41 Kg	Surface Area : m²
Modelled By : Name	

Kingspan Environmental reserve the right to alter the details of this drawing without prior notice.
This drawing is copyright and may not be reproduced or used without the written permission of Kingspan Environmental

Drawing : DS0666P

P25 Biotec Treatment Plant - Pumped

Kingspan Environmental