

Proposed Front Elevation
1:100

Proposed Side Elevation
1:100

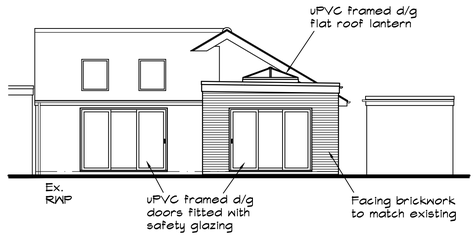

Proposed Rear Elevation
1:100

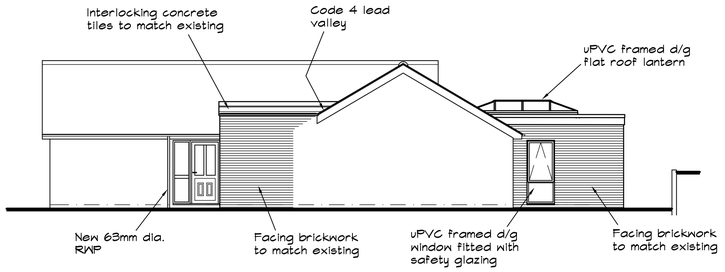

Proposed Side Elevation
1:100

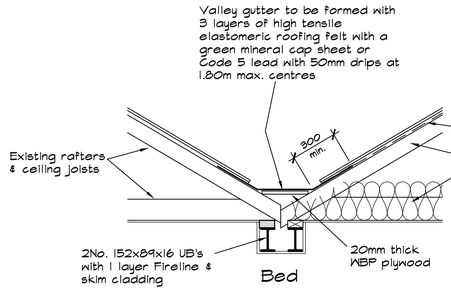

Valley Gutter Details
1:20

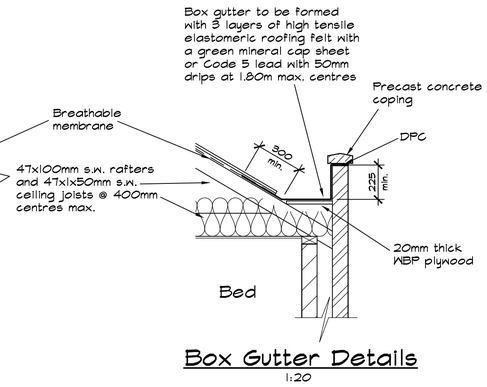

Box Gutter Details
1:20

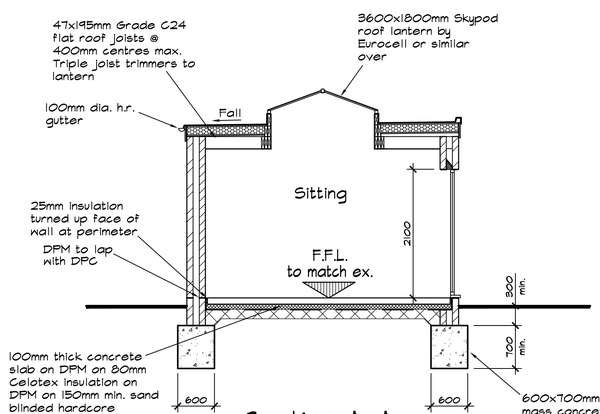

Section A-A
1:50

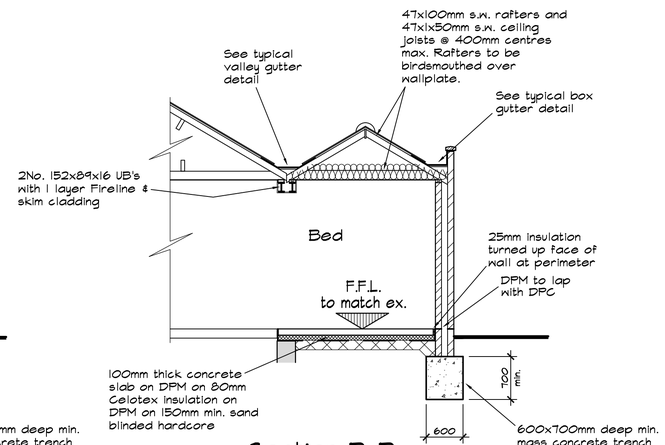

Section B-B
1:50

NOTES

1. All dimensions to be checked on site by builder prior to commencement.
2. This drawing is Copyright of Creation Building Design and may not be amended or copied, either manually or electronically, without the express written permission of the Copyright owner.
3. This drawing is to be read in conjunction with Drg. Nos. 22227-1 & 2.
4. Kitchen to be fitted with cooker hood capable of 30 litres/sec. extraction and be ducted to external wall.
5. Utility to be fitted with mechanical extractor fan capable of 30 litres/sec. extraction and be ducted to external wall.
6. LIGHTING
   1No. new light fitting to have a luminous efficiency greater than 40 lumens per circuit watt , i.e. compact flourescent fittings to be provided for each new 20m2 floor area created.
7. HEATING
   Alterations to the heating & hot water system installations to be designed, installed and commissioned by a competent person in accordance with the Domestic Heating Compliance Guide, 2006 Edition.
8. GENERAL DETAILS
   New windows to be uPVC framed draughtsealed double glazed units (16mm Argon filled gap) glazed in Energicare Classic glass to achieve a U-Value of 1.6W/m2K with 2500mm2 trickle vents. New external doors to achieve a U-Value of 1.8W/m2K. Safety glazing to doors and windows in critical areas to comply with BS 6206.

   Ventilation opening to new windows to equal 1/20 floor area of room served.

   All radiators to be fitted with TRV valves.

   Lateral restraint to walls be provided at verge, ceiling and roof levels using 30x5mm galvanised mild steel straps x 1800mm long @ 1500mm max. centres fixed across min. 3No. members with solid strutting between members.

   Steel beams to have 1 layer 15mm Fireline board & skim cladding to provide half hour fire resistance.

   All Fire Protection specified to be installed in accordance with the manufacturer's instructions and to the satisfaction of the Approved Inspector.

Rev. A 11.05.22. Details finalised for Planning & Building Regulation approval.

All electrical works to be undertaken, tested and commissioned by an electrical contractor registered under the Competent Persons Scheme.

Project
Proposed Extension at 21, Hall Farm Road, Duffield, Derby.

Client: Mr & Mrs C. Hubbard Tel. 07875 885640

Scale: 1:100, 1:50 & 1:20

Drg. No.: 22227-3A

CREATION BUILDING DESIGN
7, Brackley Drive, Spondon, Derby DE21 7SA
Tel: 01332 677959 Mob. 07969 248579
E-mail kevinfitchett7@gmail.com
Web www.creationbuildingdesign.co.uk