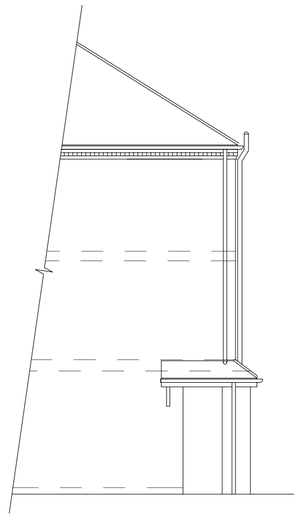

Existing Part Side Elevation
Scale 1: 100 (South)



Existing Rear Elevation
Scale 1: 100 (East)

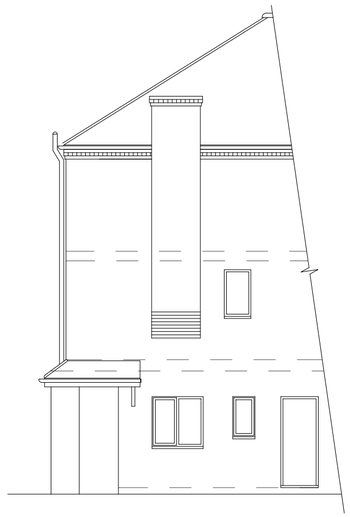

Existing Part Side Elevation
Scale 1: 100 (North)

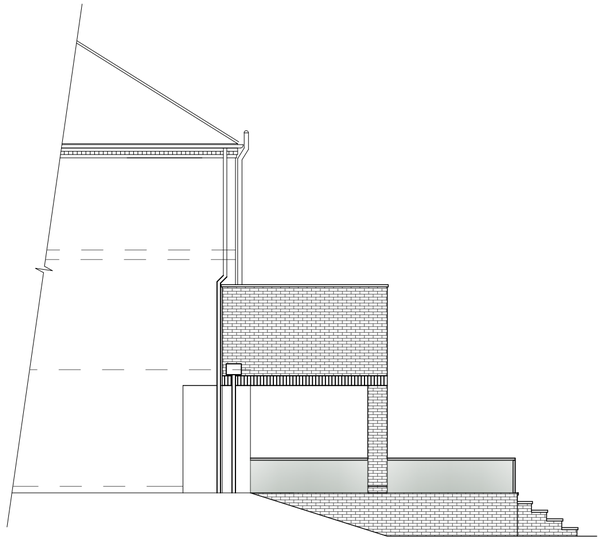

Proposed Part Side Elevation
Scale 1: 100 (South)



Proposed Rear Elevation
Scale 1: 100 (East)

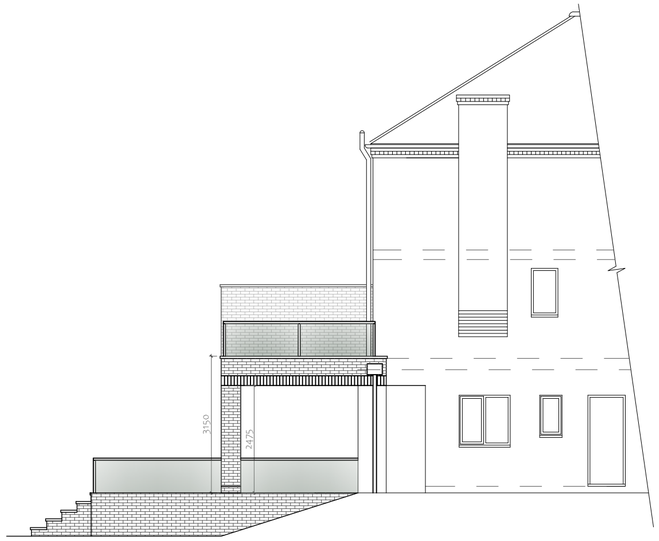

Proposed Part Side Elevation
Scale 1: 100 (North)

DO NOT SCALE:
From this drawing all dimensions are in millimetres unless otherwise stated any discrepancies are to be reported to Lacey & Owen Architectural Services Ltd.

RELEVANT DRAWINGS:
This drawing is to be read in conjunction with all other relevant drawings and details

DRAWING COPYRIGHT:
This drawing and all other relevant drawings is the property of Lacey & Owen Architectural Services Ltd. and should not copied or altered in any way without prior consent

PLANNING ISSUE

Rev	By	Date	Details
A	MO	24/05/22	Orientation labels amended. Dimension added to screen wall.

PROPOSED
Construction of Balcony to Rear

LOCATION
183B Derby Road
Ripley
Derbyshire
DE5 8HX

CLIENT
Mr Dominic Palterman

DRAWING TITLE
Existing & proposed Elevations

Drawn by	Date	Dwg.No	Rev
MO	April 2022	KJ3348/02	A

Scales @ A2 1:100

139 Bath Street
Ilkeston
Derbyshire
DE7 8AS

LACEY & OWEN
ARCHITECTURAL SERVICES LTD

T: 0115 944 5138
E: enquiry@laceyandowen.co.uk
www.laceyandowen.co.uk

CIAT
REGISTERED PRACTICE

0 1m 5m