Dimensions are not to be scaled from this drawing

Kingfisher Lighting

Part of the Luceco PLC group of companies LUCECO

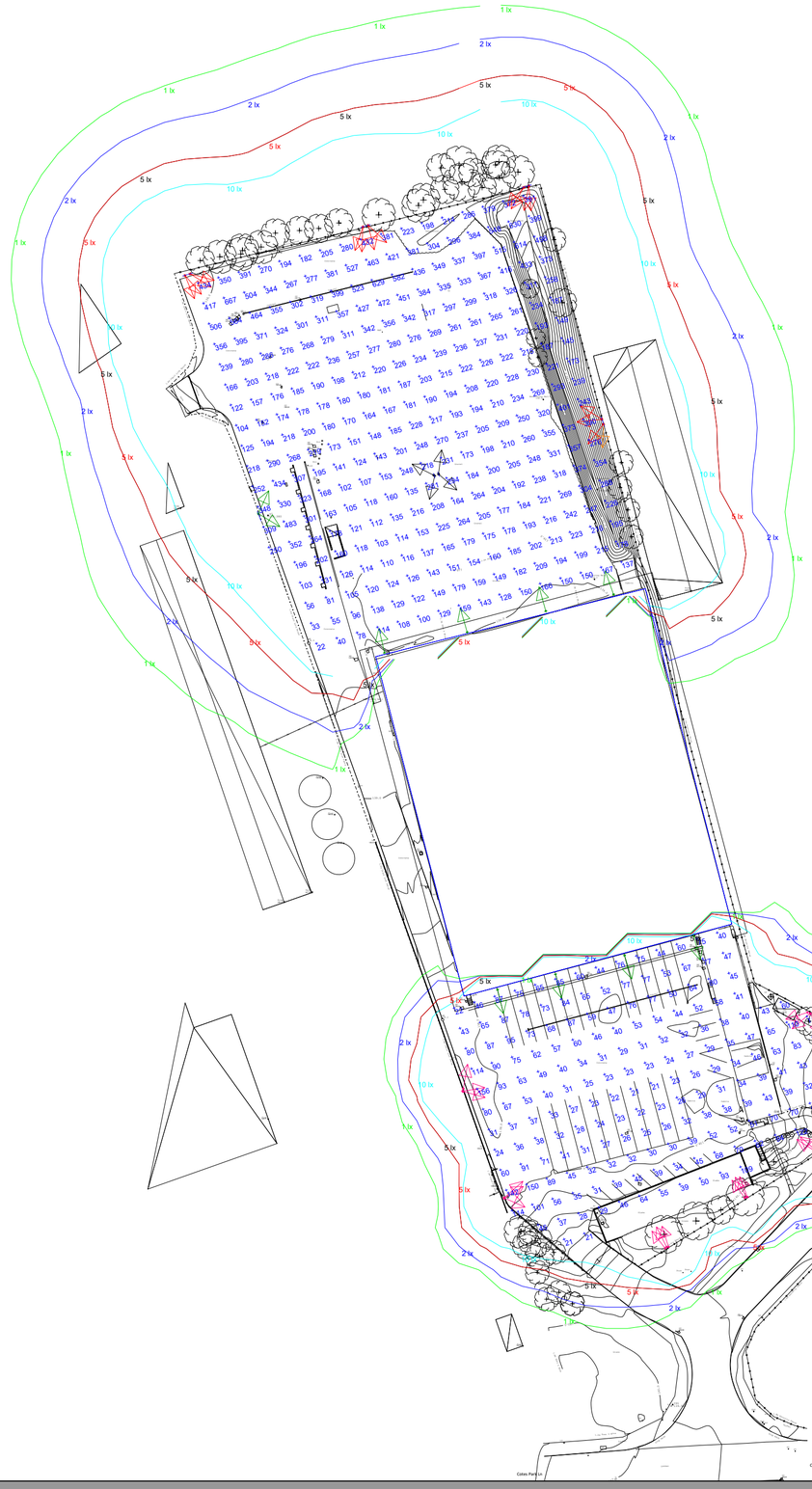

Bracket Example STM2-

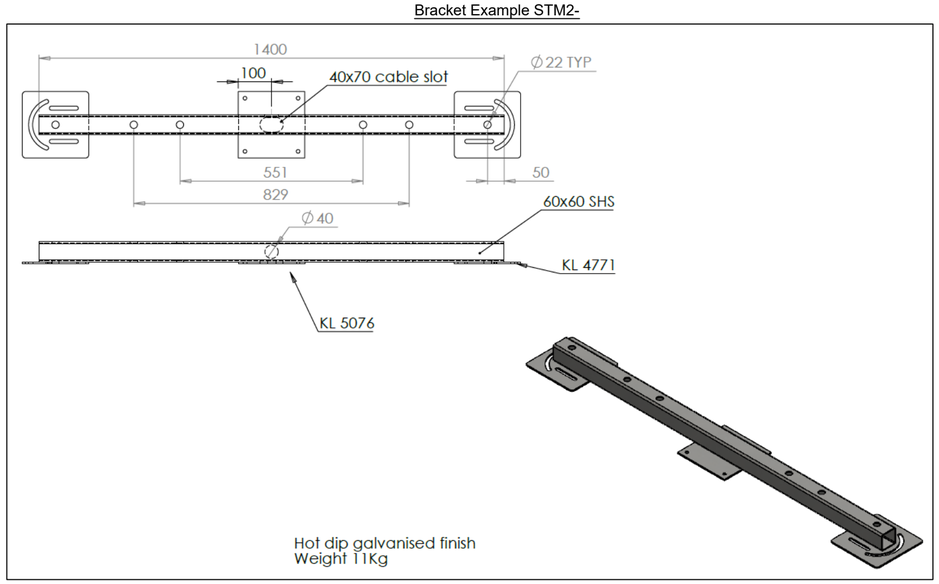

1. We recommend that each column on the edge is a minumum of 2000mm away from eachother due to the size of the brackets.
2. We recommend that the central columns are a minimum of 600mm back to back due to the size of the fixture.

Calculation Summary							
Label	CalcType	Units	Avg	Max	Min	Min/Avg	Min/Max
Front Service Yard	Illuminance	Lux	52.79	156	21	0.40	0.13
Rear Service Yard	Illuminance	Lux	246.65	667	22	0.09	0.03

Luminaire Schedule

Symbol	Qty	Label	Arrangement	Description
	15	A	SINGLE	1 x 900w Amnis Flood with NST Optic Mounted @ 12m Heavy Duty
	1	A1	SINGLE	1 x 900w Amnis Flood with NFT Optic Mounted @ 12m Heavy Duty
	4	B	SINGLE	1 x 900w Amnis Flood with WST Optic Mounted @ 12m Heavy Duty
	18	C	SINGLE	1 x 160w LED Zactis Floodlight with FL50 Optic Mounted @ 10m
	8	EX1	SINGLE	1 x 200w LED Existing Floodlight Mounted @ 10m Wall Mounted
	2	D	SINGLE	1 x 900w Amnis Flood with NST Optic Mounted @ 8m Heavy Duty

N

Lorry Park – Rear Service Area 250 Lux , Front 50 Lux 0.4

Scale	Project Number
1: 1000 at A2	D1 . PROJECT 45430_OPTION_E
Date	Drawing No.
22/03/2022	Design F

Lighting Designer : Tom Ford

For our LED lighting designs a 0.9mf has been used. If this differs from the maintenance period for this project then you must advise us accordingly

A lighting applications design service is provided by us in good faith and without charge, relating to Kingfisher products only. As such, whilst every endeavor is made for accuracy from information provided by yourselves, the final responsibility for the suitability of the design lies with the client. The company cannot, therefore, accept any liability or consequential loss incurred.

A2