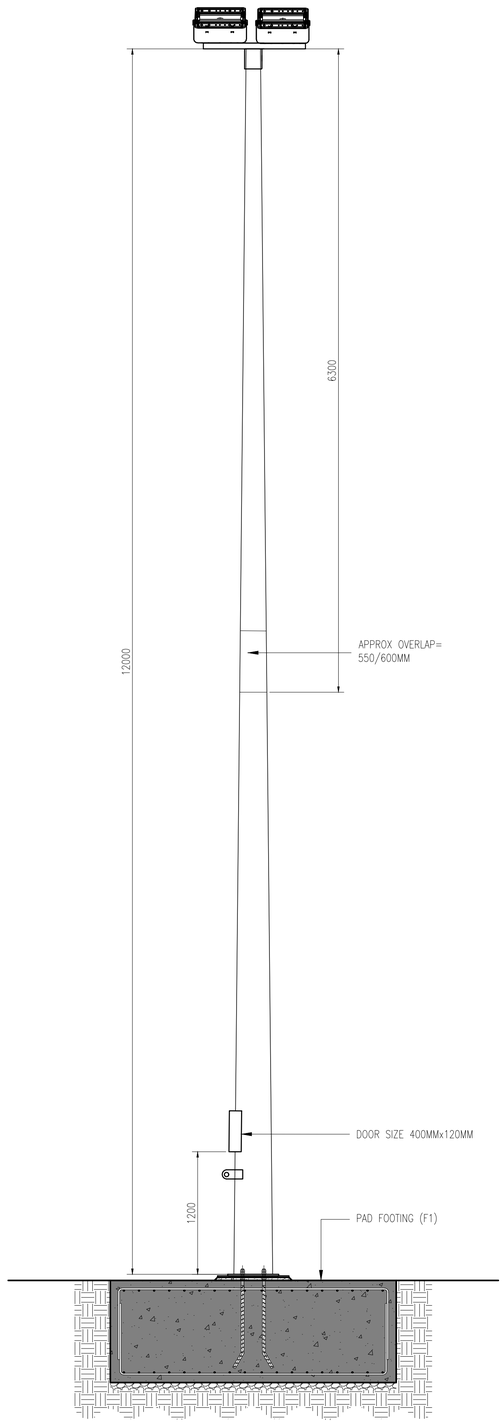

ELEVATION

SCALE 1:30M

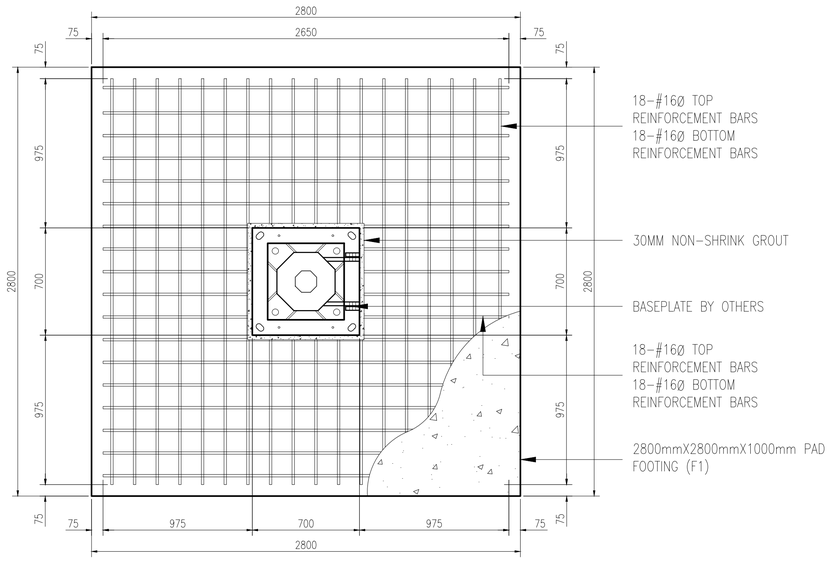

PLAN

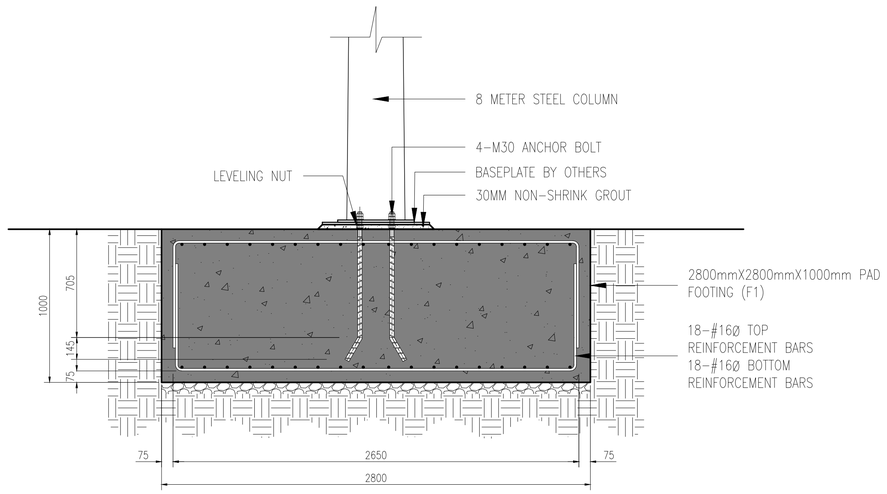

ELEVATION

COLUMN FOOTING (F1) DETAIL

SCALE 1:20M

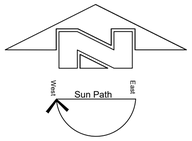

REV.	DESCRIPTION	DWN	CHK	DATE
A.	FOR APPROVAL			–

THIS DRAWING IS CONFIDENTIAL AND MUST NOT BE REPRODUCED WITHOUT THE CONSENT OF JOHN DAVIES ASSOCIATES.

CLIENT
EURO PROPERTIES LTD

PROJECT
LIGHTING AT EPIL
GRAHAM CLOSE ALFRETON

TITLE
FOOTING DETAILS

DWN	DATE	CHK	DATE	APP.	DATE	SCALE
						1:20/ 1:30

John Davies Associates
1 St John's Rd.
Queen's Park
Chester. CH4 7AL
Tel/Fax: 01244 677991

JOHN DAVIES ASSOCIATES Consulting Engineers

Drawing Number
JDA/421/1/1

A1

REV. 0

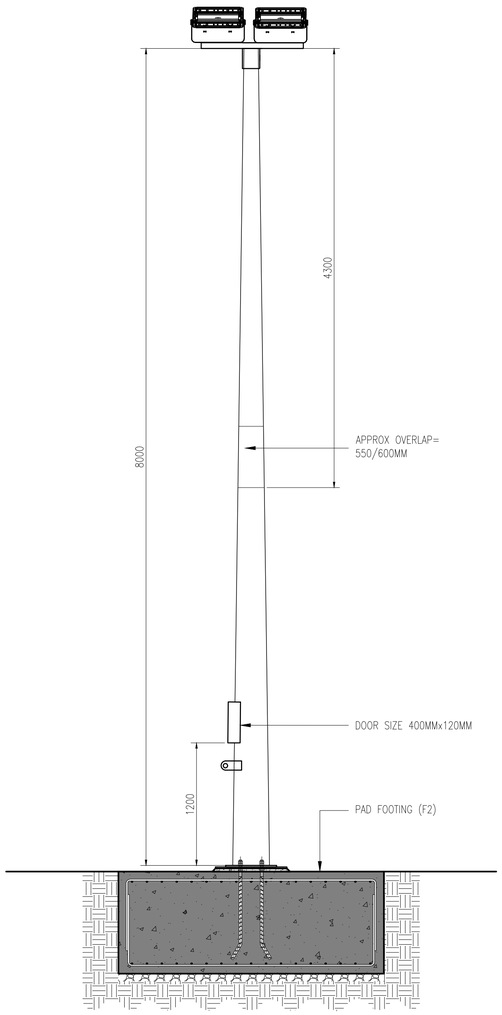

ELEVATION

SCALE 1:30M

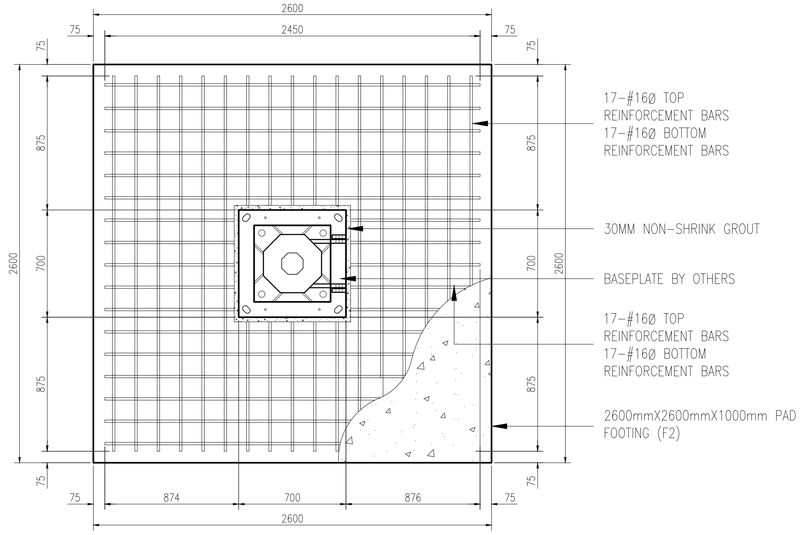

PLAN

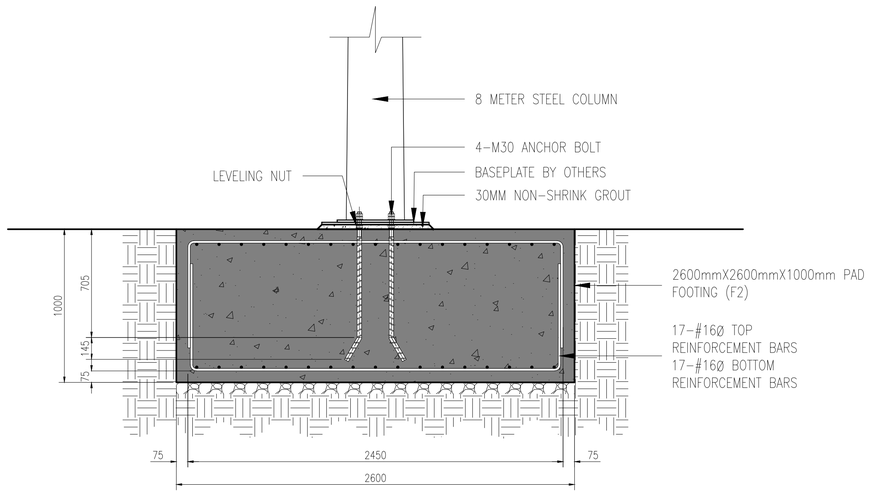

ELEVATION

COLUMN FOOTING (F2) DETAIL

SCALE 1:20M

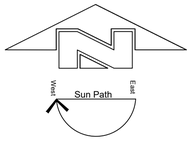

REV.	DESCRIPTION	DWN	CHK	DATE
A.	FOR APPROVAL			–

THIS DRAWING IS CONFIDENTIAL AND MUST NOT BE REPRODUCED WITHOUT THE CONSENT OF JOHN DAVIES ASSOCIATES.

CLIENT
EURO PROPERTIES LTD

PROJECT
LIGHTING AT EPIL
GRAHAM CLOSE ALFRETON

TITLE
FOOTING DETAILS

DWN	DATE	CHK	DATE	APP.	DATE	SCALE
						1:20/ 1:30

John Davies Associates
1 St John's Rd.
Queen's Park
Chester. CH4 7AL
Tel/Fax: 01244 677991

JOHN DAVIES ASSOCIATES Consulting Engineers

Drawing Number
JDA/421/1/1

A1

REV. 0

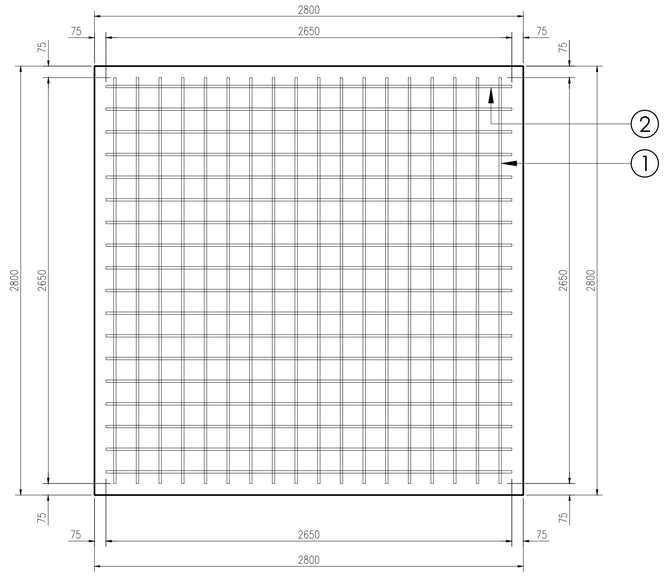

PLAN VIEW

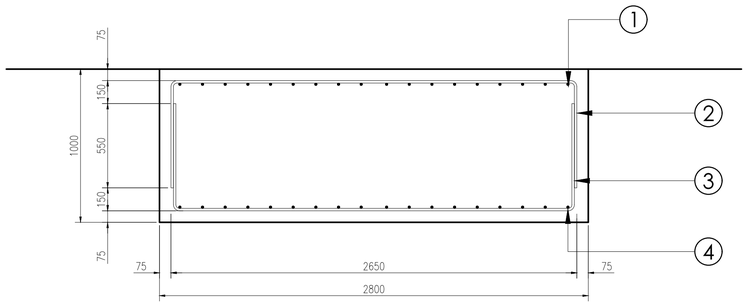

ELEVATION VIEW

PAD FOOTING (F1) REINFORCEMENT DETAIL

SCALE 1:20M

BAR BENDING SCHEDULE (F1)

MARK	SHAPE	PCS	DIAM. mm	LENGTH mm	WEIGHT kg	TOTAL kg
1	2650 (700, 700)	18	Ø16	4050	6.39	115.02
2	2650 (700, 700)	18	Ø16	4050	6.39	115.02
3	700, 700 / 2620	18	Ø16	4020	6.34	114.12
4	700, 700 / 2620	18	Ø16	4020	6.34	114.12

GRAND TOTAL : 458.28 kg

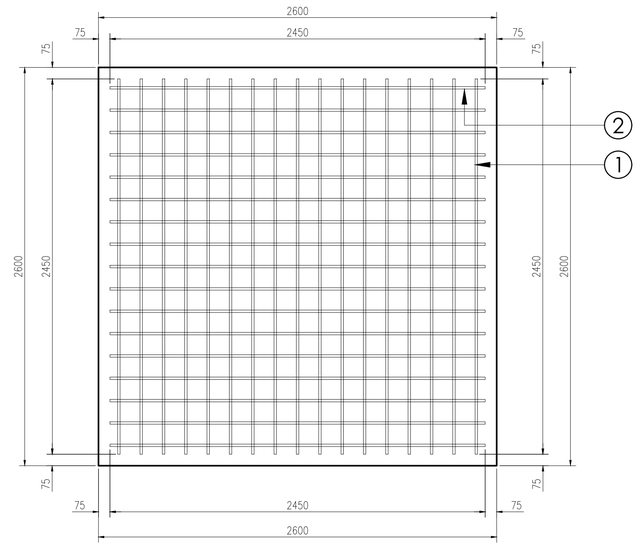

PLAN VIEW

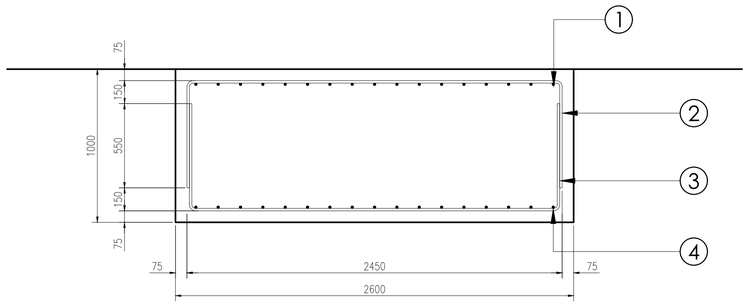

ELEVATION VIEW

PAD FOOTING (F2) REINFORCEMENT DETAIL

SCALE 1:20M

BAR BENDING SCHEDULE (F2)

MARK	SHAPE	PCS	DIAM. mm	LENGTH mm	WEIGHT kg	TOTAL kg
1	2450 (700, 700)	17	Ø16	3850	6.08	103.36
2	2450 (700, 700)	17	Ø16	3850	6.08	103.36
3	700, 700 / 2420	17	Ø16	3820	6.03	102.51
4	700, 700 / 2420	17	Ø16	3820	6.03	102.51

GRAND TOTAL : 411.74 kg

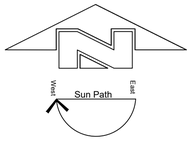

REV.	DESCRIPTION	DWN	CHK	DATE
A.	FOR APPROVAL			–

THIS DRAWING IS CONFIDENTIAL AND MUST NOT BE REPRODUCED WITHOUT THE CONSENT OF JOHN DAVIES ASSOCIATES.

CLIENT
EURO PROPERTIES LTD

PROJECT
LIGHTING AT EPIL
GRAHAM CLOSE ALFRETON

TITLE
BAR BENDING SCHEDULE

DWN	DATE	CHK	DATE	APP.	DATE	SCALE
						1:20

John Davies Associates
1 St John's Rd.
Queen's Park
Chester. CH4 7AL
Tel/Fax: 01244 677991

JOHN DAVIES ASSOCIATES Consulting Engineers

Drawing Number
JDA/421/1/1
A1
REV. 0