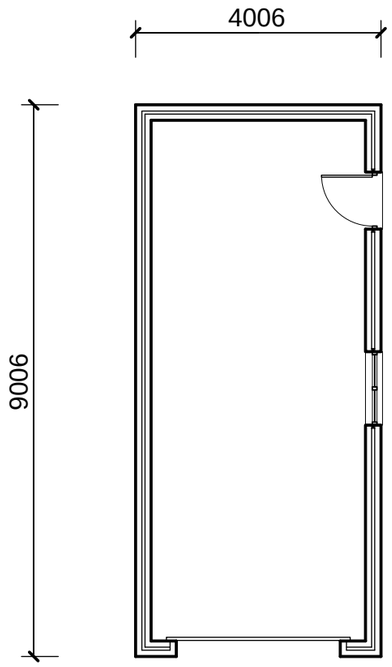

Layout

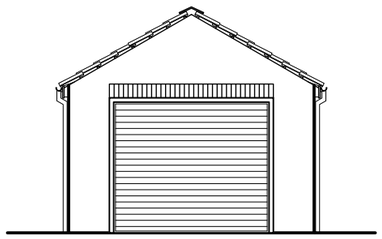

Front Elevation

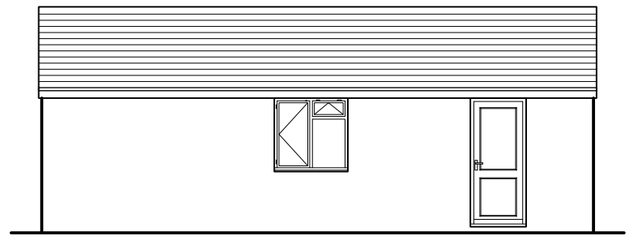

Side Elevation

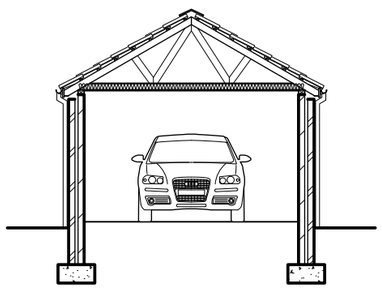

Section

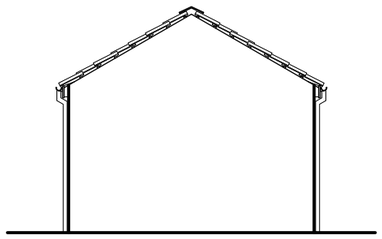

Rear Elevation

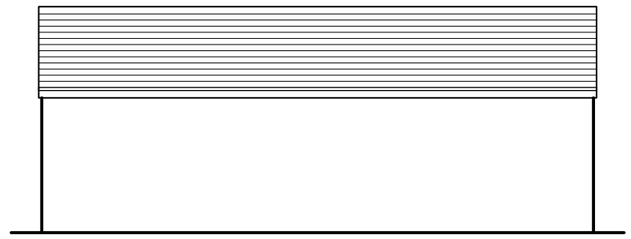

Side Elevation

Scale 1:100 - A3

Drwg No - AD/103/01

Proposed Detached Garage at 15 St Andrews Drive, Swanwick, Alfreton, DE55 1AW