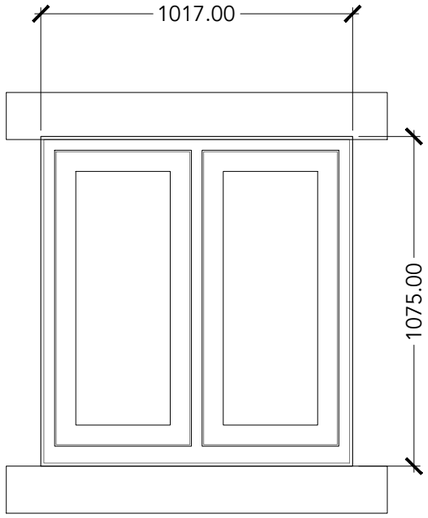

W1 - 4

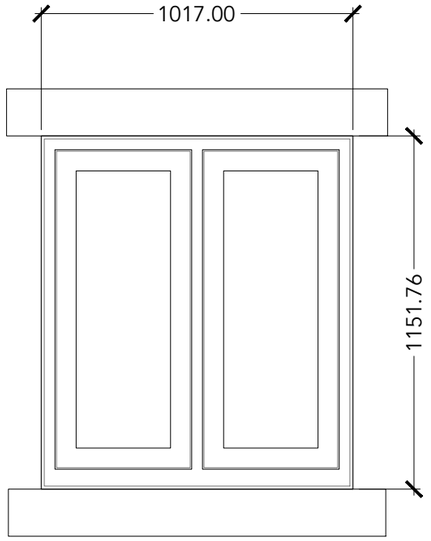

W5 & 6

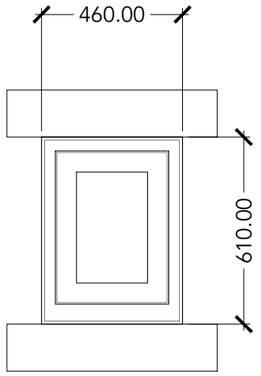

W7

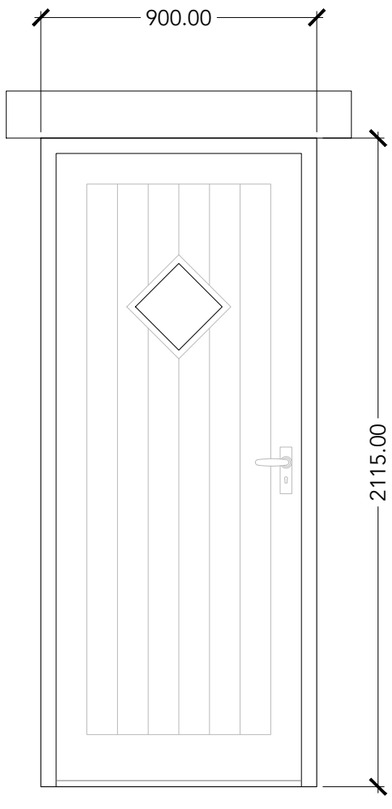

D1

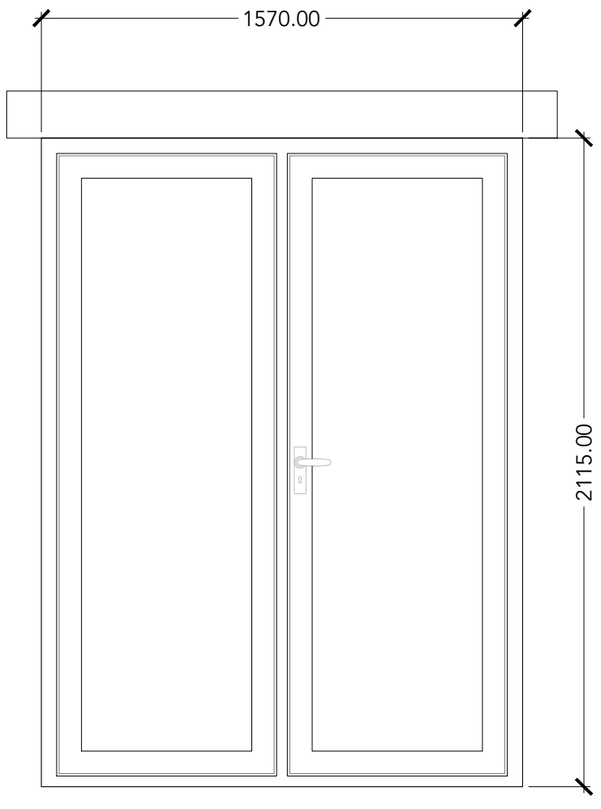

D2

General Notes.

No.	Details	Date

kerry design

17 West End
Wirksworth
Derbyshire
DE4 4EG

tel: 07766 386518
email: claire@kerry-design.co.uk
web: www.kerry-design.co.uk

Title.	Window Details
Project.	25A Green Lane, Belper DE56 1BY
For.	Corinna & Jeremy Beatson

Job No.	188	Dwg No. 02
Date	15.09.22	
Scale	1:20 @ A3	