IF IN DOUBT - ASK!
No copies to be taken without the permission of D

A1

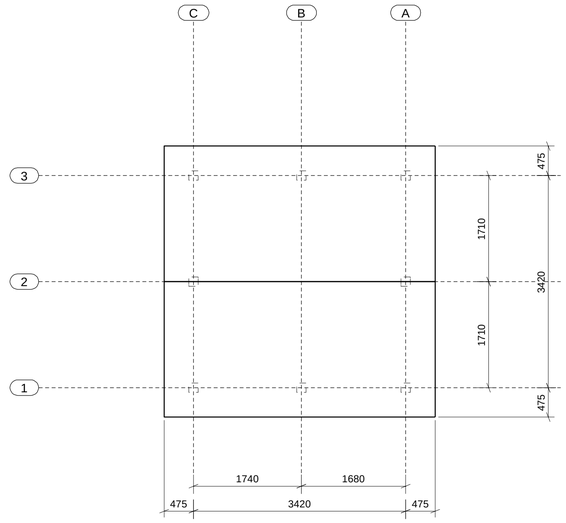

Roof Plan View

Timber Frame Roof Construction
with Plastic Tile Effect Cladding

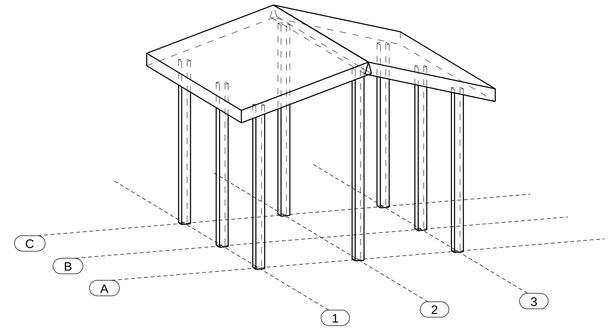

3d

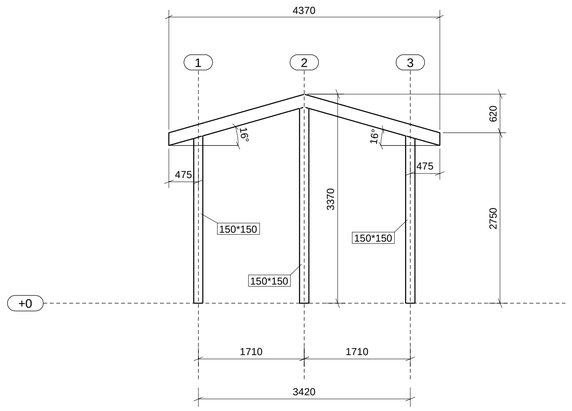

Elevation Grid C

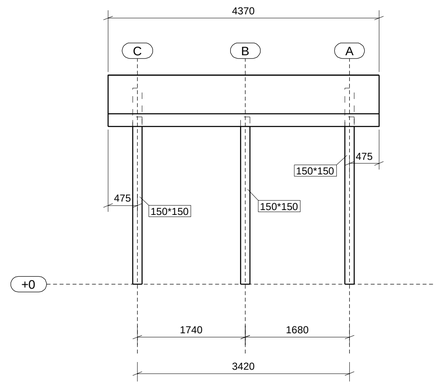

Elevation Grid 1

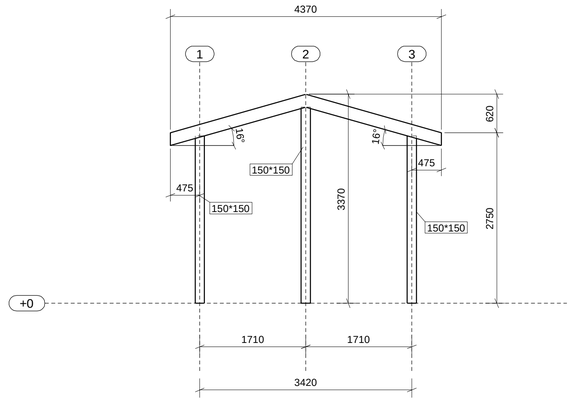

Elevation Grid A

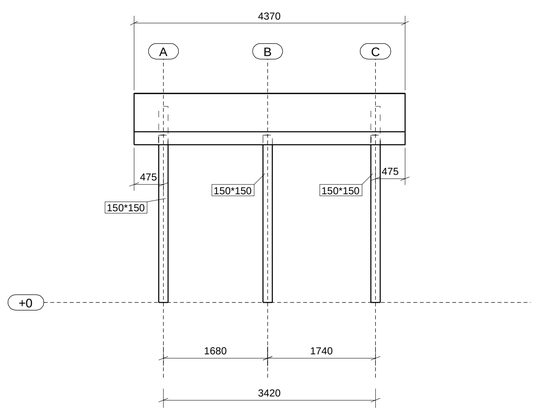

Elevation Grid 3

All Dimensions
are in Millimeters - Scale 1:50

Client	DRG BUILDER
Project Description	DRG PROJ NAME
Site Address	DRG ADDRESS
Drawing Title	ELEVATION & PLAN VIEWS
Scale	1:50
CEL Job No.	DRG PR***
Drawn by	A.Booth
Project Type	
Date Created	05.10.2022
Project	PERGOLA
Company	Volume Level Type Role Drawing No.
Revision	