PROPOSED ROOF PLAN 1:100

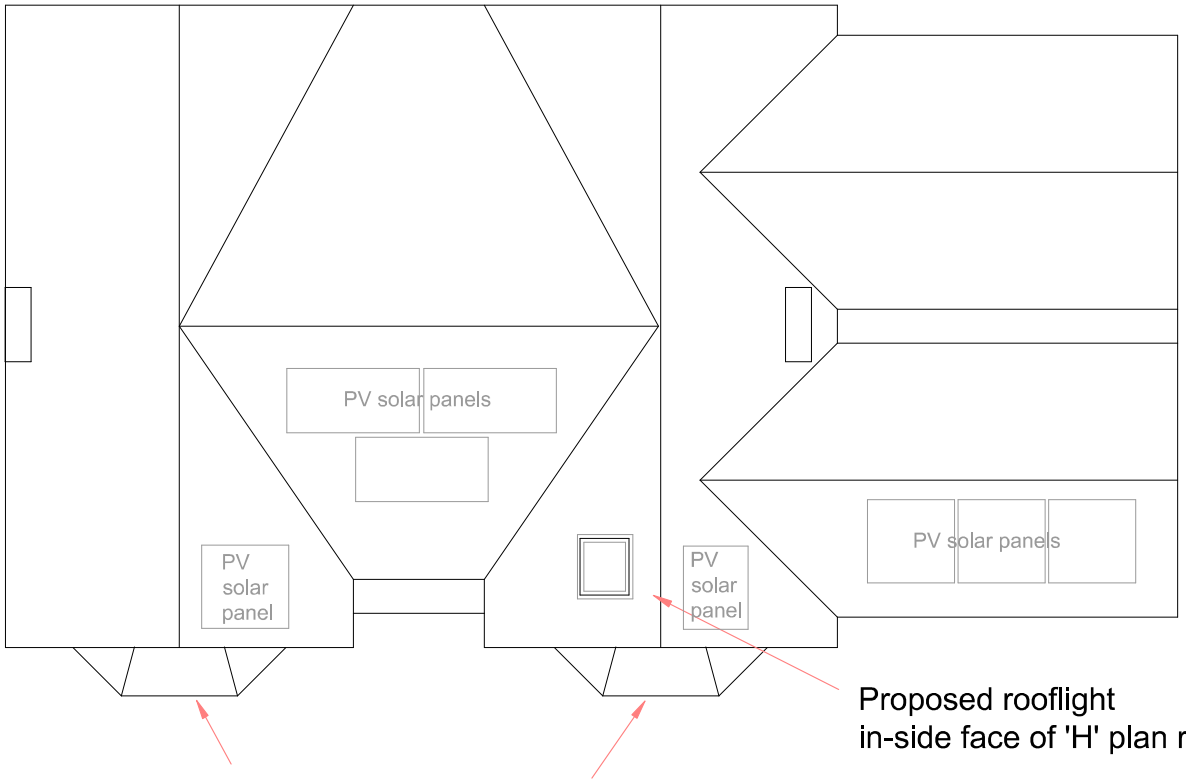

Proposed rooflight
in-side face of 'H' plan roof

Proposed lead roofs
over existing flat-roof bay windows

SOLAR PANEL SECTION 1:20

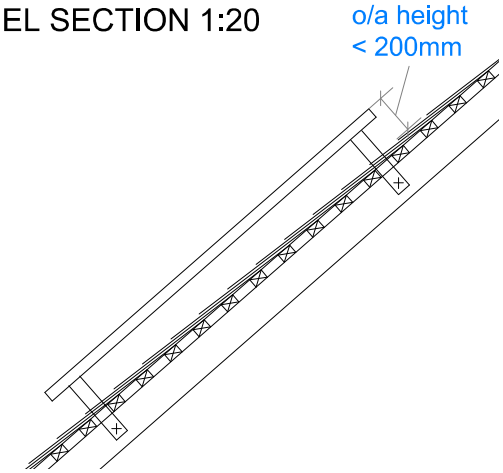

PV solar panels
each panel 1.7 x 1.1m
Fitted < 200mm from existing roof s

Holt House, Holt Lane, Lea
Works to roofs at rear
Proposed Plan
2031-02/D
As shown @A4