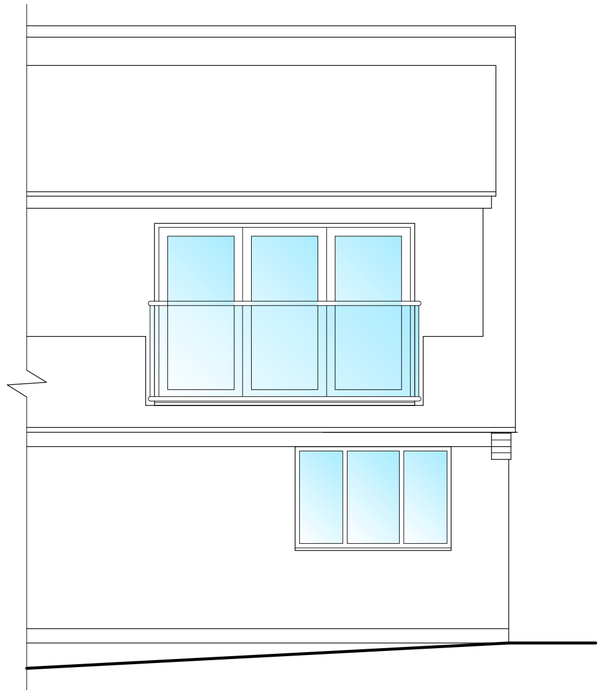

01/06 PROPOSED REAR ELEVATION
SCALE 1:50

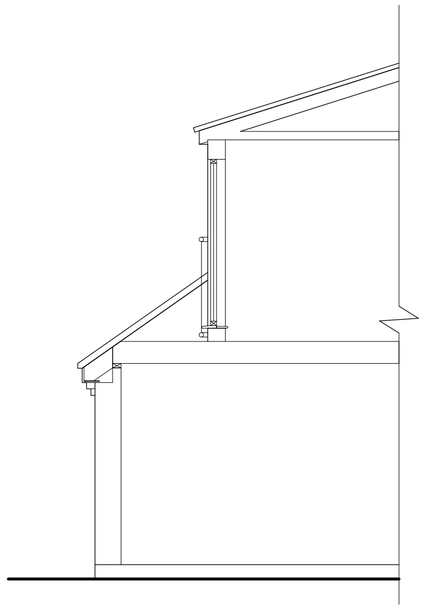

02/06 SECTION THROUGH BALCONY
SCALE 1:50

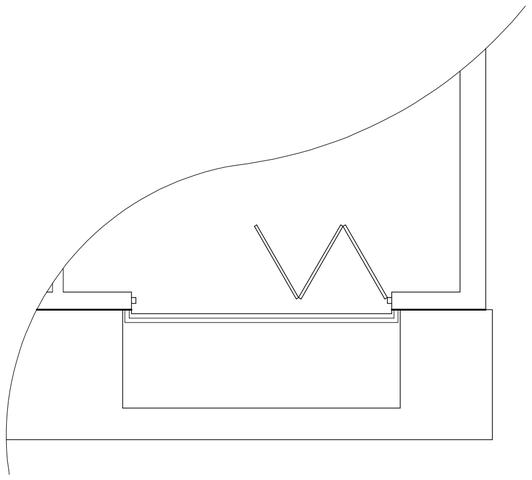

03/06 PROPOSED FIRST FLOOR PLAN
SCALE 1:50

Notes:

Amendments

No.	Description	Date
A	Original	26 Oct 2022
B	–	-
C	–	-
D	–	-
E	–	-
F	–	-
G	–	-
H	–	-
I	–	-
J	–	-

Josef ARCHITECTURE

69 Laceyfields Road
Heanor
Derbyshire
DE75 7HU

t: 01773 68 72 68
info josefarchitecture.co.uk
www.josefarchitecture.co.uk
Company No. 06264542

Project:

Proposed porch, single storey side and rear extension, alterations to roof design, including dormer windows to front and rear. Balcony to rear and detached garage to front elevation.

Employer:

Mr Wilson & Ms Beardmore

Site Address:

30 Belper Road
Holbrook
Derbyshire
DE56 0SX

Title:

Proposed balcony detail

Scale	1:50	Drawing	22/005/06
Size	A2	Drawn By	JAS

Do not scale from these drawings. All dimensions shown are nominal and must be checked on site prior to ordering materials or commencing of works. These drawings are Copyright protected. They may not be reproduced without the express written permission of Josef Architecture Limited.