Frame No: 1

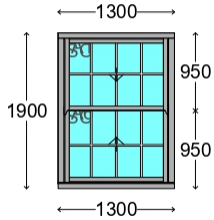

System	Ultimate Rose Mk3 VS		Run-Through Sash Horn
Finish:	White Foil	**Gasket:**	Co-Extruded Gasket White
Corner Finish:	Fully Mechanical	**Brushpile:**	White
Cill:	25mm Flush Cill	**Extras:**	Deep Bottom Rail
	Ultimate Pole Eye x2 - Gold		Sash Lifts Drilled
	Ultimate Sash Lifts - Gold		Pole Eyes Drilled
Locks:	Globe Lock - Gold		No Fire Escape
Limit Stops:	No Limit Stops		
Stop Height:	No Limit Stops		
Staff Bead:	No - Not Included		

Overall size: 1300mm x 1900mm
Split from Top: 950mm

Qty: 1

Window: Window 1

Restrictor:	Tilt Restrictor Bot Sash 350mm		
	Tilt Restrictor Top Sash 350mm		
Location:	FBL RIGHT		
Glass Sizes:	A1	1130 x 855	
	A6	1131 x 843	

Glass:
A1 4/20/4SC Soft Clear Low Iron : White WarmE (U) Ulti Bar Grid x8 Argon Gas Filled
A6 4/20/4SC Soft Clear Low Iron : White WarmE Ulti Bar Grid x8 Argon Gas Filled
Comments:

Frame No: 2

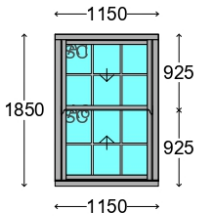

System	Ultimate Rose Mk3 VS		Run-Through Sash Horn
Finish:	White Foil	**Gasket:**	Co-Extruded Gasket White
Corner Finish:	Fully Mechanical	**Brushpile:**	White
Cill:	25mm Flush Cill	**Extras:**	Deep Bottom Rail
	Ultimate Pole Eye x2 - Gold		Sash Lifts Drilled
	Ultimate Sash Lifts - Gold		Pole Eyes Drilled
Locks:	Globe Lock - Gold		No Fire Escape
Limit Stops:	No Limit Stops		
Stop Height:	No Limit Stops		
Staff Bead:	No - Not Included		

Overall size: 1150mm x 1850mm
Split from Top: 925mm

Qty: 1

Window: Window 2

Restrictor:	Tilt Restrictor Bot Sash 350mm		
	Tilt Restrictor Top Sash 350mm		
Location:	FBL RIGHT		
Glass Sizes:	A1	980 x 830	
	A6	981 x 818	

Glass:
A1 4/20/4SC Soft Clear Low Iron : White WarmE (U) Ulti Bar Grid x6 Argon Gas Filled
A6 4/20/4SC Soft Clear Low Iron : White WarmE Ulti Bar Grid x6 Argon Gas Filled
Comments:

Frame No: 3

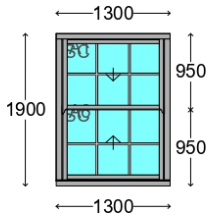

Overall size: 1300mm x 1900mm
Split from Top: 950mm

System	Ultimate Rose Mk3 VS		Run-Through Sash Horn
Finish:	White Foil	**Gasket:**	Co-Extruded Gasket White
Corner Finish:	Fully Mechanical	**Brushpile:**	White
Cill:	25mm Flush Cill	**Extras:**	Deep Bottom Rail
	Ultimate Pole Eye x2 - Gold		Sash Lifts Drilled
	Ultimate Sash Lifts - Gold		Pole Eyes Drilled
Locks:	Globe Lock - Gold		No Fire Escape
Limit Stops:	No Limit Stops		
Stop Height:	No Limit Stops		
Staff Bead:	No - Not Included		

Qty: 1

Window: Window 3

Restrictor: Tilt Restrictor Bot Sash 350mm
Tilt Restrictor Top Sash 350mm
Location: FBL
Glass Sizes: A1 1130 x 855
A6 1131 x 843

Glass:
A1 4/20/4SC Soft Clear Low Iron : White WarmE (U) Ulti Bar Grid x6 Argon Gas Filled
A6 4/20/4SC Soft Clear Low Iron : White WarmE Ulti Bar Grid x6 Argon Gas Filled
Comments:

Frame No: 4

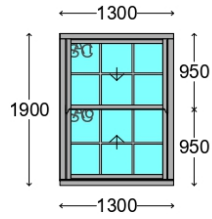

Overall size: 1300mm x 1900mm
Split from Top: 950mm

System	Ultimate Rose Mk3 VS		Run-Through Sash Horn
Finish:	White Foil	**Gasket:**	Co-Extruded Gasket White
Corner Finish:	Fully Mechanical	**Brushpile:**	White
Cill:	25mm Flush Cill	**Extras:**	Deep Bottom Rail
	Ultimate Pole Eye x2 - Gold		Sash Lifts Drilled
	Ultimate Sash Lifts - Gold		Pole Eyes Drilled
Locks:	Globe Lock - Gold		No Fire Escape
Limit Stops:	No Limit Stops		
Stop Height:	No Limit Stops		
Staff Bead:	No - Not Included		

Qty: 1

Window: Window 4

Restrictor: Tilt Restrictor Bot Sash 350mm
Tilt Restrictor Top Sash 350mm
Location: FBL
Glass Sizes: A1 1130 x 855
A6 1131 x 843

Glass:
A1 4/20/4SC Soft Clear Low Iron : White WarmE (U) Ulti Bar Grid x6 Argon Gas Filled
A6 4/20/4SC Soft Clear Low Iron : White WarmE Ulti Bar Grid x6 Argon Gas Filled
Comments:

Frame No: 5

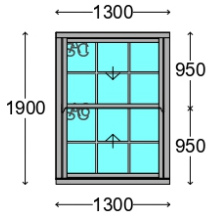

Overall size: 1300mm x 1900mm
Split from Top: 950mm

System	Ultimate Rose Mk3 VS		Run-Through Sash Horn
Finish:	White Foil	**Gasket:**	Co-Extruded Gasket White
Corner Finish:	Fully Mechanical	**Brushpile:**	White
Cill:	25mm Flush Cill	**Extras:**	Deep Bottom Rail
	Ultimate Pole Eye x2 - Gold		Sash Lifts Drilled
	Ultimate Sash Lifts - Gold		Pole Eyes Drilled
Locks:	Globe Lock - Gold		No Fire Escape
Limit Stops:	No Limit Stops		
Stop Height:	No Limit Stops		
Staff Bead:	No - Not Included		

		Restrictor:	Tilt Restrictor Bot Sash 350mm
			Tilt Restrictor Top Sash 350mm
Qty: 1	**Window:** Window 5	**Location:**	FBL
		Glass Sizes:	A1 1130 x 855
			A6 1131 x 843

Glass:
A1 4/20/4SC Soft Clear Low Iron : White WarmE (U) Ulti Bar Grid x6 Argon Gas Filled
A6 4/20/4SC Soft Clear Low Iron : White WarmE Ulti Bar Grid x6 Argon Gas Filled
Comments:

Frame No: 6

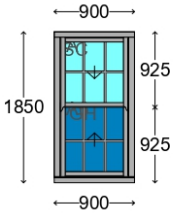

Overall size: 900mm x 1850mm
Split from Top: 925mm

System	Ultimate Rose Mk3 VS		Run-Through Sash Horn
Finish:	White Foil	**Gasket:**	Co-Extruded Gasket White
Corner Finish:	Fully Mechanical	**Brushpile:**	White
Cill:	25mm Flush Cill	**Extras:**	Deep Bottom Rail
	Ultimate Pole Eye x2 - Gold		Sash Lifts Drilled
	Ultimate Sash Lifts - Gold		Pole Eyes Drilled
Locks:	Globe Lock - Gold		No Fire Escape
Limit Stops:	No Limit Stops		
Stop Height:	No Limit Stops		
Staff Bead:	No - Not Included		

		Restrictor:	Tilt Restrictor Bot Sash 350mm
			Tilt Restrictor Top Sash 350mm
Qty: 1	**Window:** Window 6	**Location:**	REAR LANDING MIDDLE
		Glass Sizes:	A1 730 x 830
			A6 731 x 818

Glass:
A1 4/20/4SC Soft Clear Low Iron : White WarmE (U) Ulti Bar Grid x6 Argon Gas Filled
A6 4/20/4STC Soft Tough Clear Low Iron : White WarmE Ulti Bar Grid x6 Argon Gas Filled
Comments:

Frame No: 7

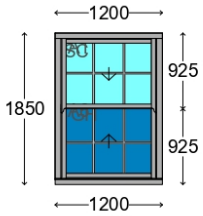

Overall size: 1200mm x 1850mm
Split from Top: 925mm

System	Ultimate Rose Mk3 VS		Run-Through Sash Horn
Finish:	White Foil	**Gasket:**	Co-Extruded Gasket White
Corner Finish:	Fully Mechanical	**Brushpile:**	White
Cill:	25mm Flush Cill	**Extras:**	Deep Bottom Rail
	Ultimate Pole Eye x2 - Gold		Sash Lifts Drilled
	Ultimate Sash Lifts - Gold		Pole Eyes Drilled
Locks:	Globe Lock - Gold		No Fire Escape
Limit Stops:	No Limit Stops		
Stop Height:	No Limit Stops		
Staff Bead:	No - Not Included		

		Restrictor:	Tilt Restrictor Bot Sash 350mm
			Tilt Restrictor Top Sash 350mm
Qty: 1	**Window:** Window 7	**Location:**	RBR
		Glass Sizes:	A1 1030 x 830
			A6 1031 x 818

Glass:
A1 4/20/4SC Soft Clear Low Iron : White WarmE (U) Ulti Bar Grid x6 Argon Gas Filled
A6 4/20/4STC Soft Tough Clear Low Iron : White WarmE Ulti Bar Grid x6 Argon Gas Filled
Comments:

Frame No: 8

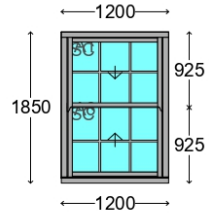

Overall size: 1200mm x 1850mm
Split from Top: 925mm

System	Ultimate Rose Mk3 VS		Run-Through Sash Horn
Finish:	White Foil	**Gasket:**	Co-Extruded Gasket White
Corner Finish:	Fully Mechanical	**Brushpile:**	White
Cill:	25mm Flush Cill	**Extras:**	Deep Bottom Rail
	Ultimate Pole Eye x2 - Gold		Sash Lifts Drilled
	Ultimate Sash Lifts - Gold		Pole Eyes Drilled
Locks:	Globe Lock - Gold		No Fire Escape
Limit Stops:	No Limit Stops		
Stop Height:	No Limit Stops		
Staff Bead:	No - Not Included		

Restrictor: Tilt Restrictor Bot Sash 350mm
Tilt Restrictor Top Sash 350mm

Qty: 1 **Window:** Window 8 **Location:** RBR 1

Glass Sizes: A1 1030 x 830
A6 1031 x 818

Glass:
A1 4/20/4SC Soft Clear Low Iron : White WarmE (U) Ulti Bar Grid x6 Argon Gas Filled
A6 4/20/4SC Soft Clear Low Iron : White WarmE Ulti Bar Grid x6 Argon Gas Filled
Comments:

Frame No: 9

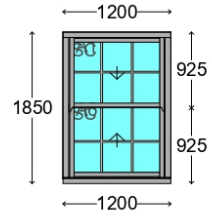

Overall size: 1200mm x 1850mm
Split from Top: 925mm

System	Ultimate Rose Mk3 VS		Run-Through Sash Horn
Finish:	White Foil	**Gasket:**	Co-Extruded Gasket White
Corner Finish:	Fully Mechanical	**Brushpile:**	White
Cill:	25mm Flush Cill	**Extras:**	Deep Bottom Rail
	Ultimate Pole Eye x2 - Gold		Sash Lifts Drilled
	Ultimate Sash Lifts - Gold		Pole Eyes Drilled
Locks:	Globe Lock - Gold		No Fire Escape
Limit Stops:	No Limit Stops		
Stop Height:	No Limit Stops		
Staff Bead:	No - Not Included		

Restrictor: Tilt Restrictor Bot Sash 350mm
Tilt Restrictor Top Sash 350mm

Qty: 1 **Window:** Window 9 **Location:** RBR 2

Glass Sizes: A1 1030 x 830
A6 1031 x 818

Glass:
A1 4/20/4SC Soft Clear Low Iron : White WarmE (U) Ulti Bar Grid x6 Argon Gas Filled
A6 4/20/4SC Soft Clear Low Iron : White WarmE Ulti Bar Grid x6 Argon Gas Filled
Comments:

V

Ultimate rose

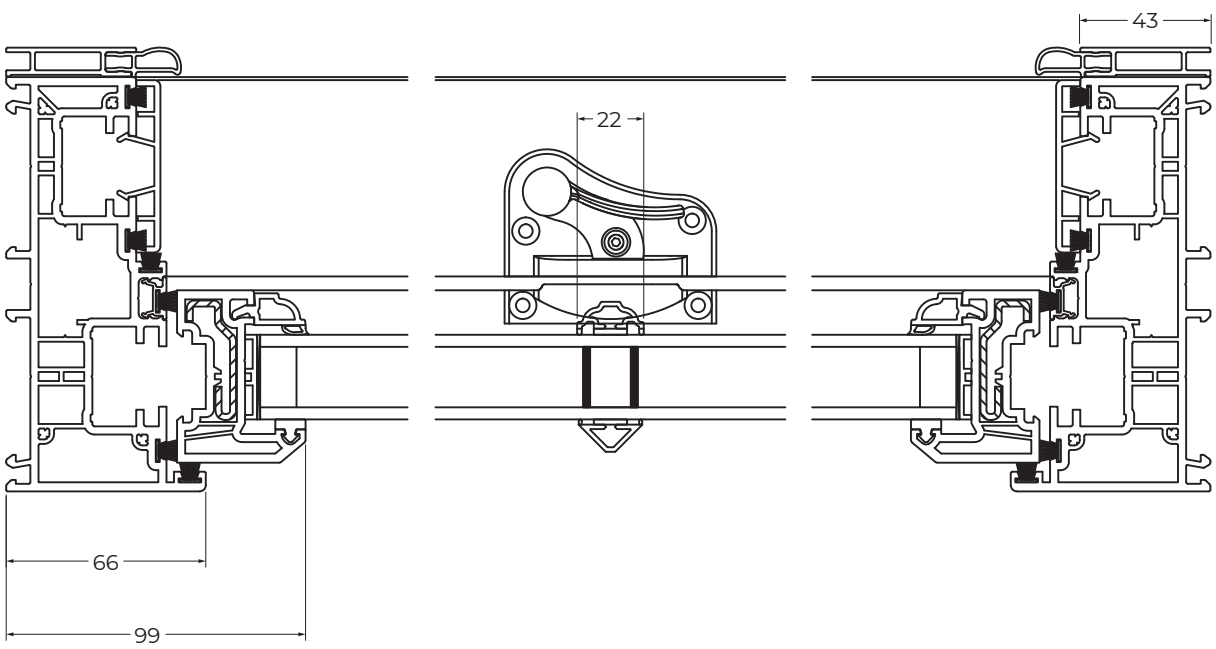

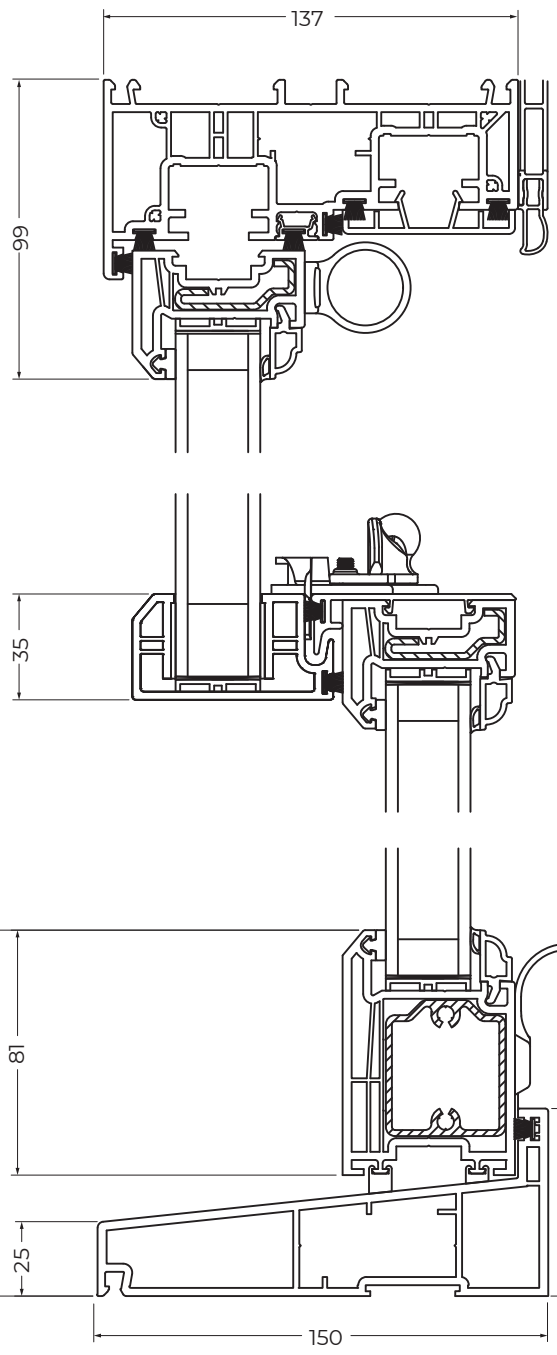

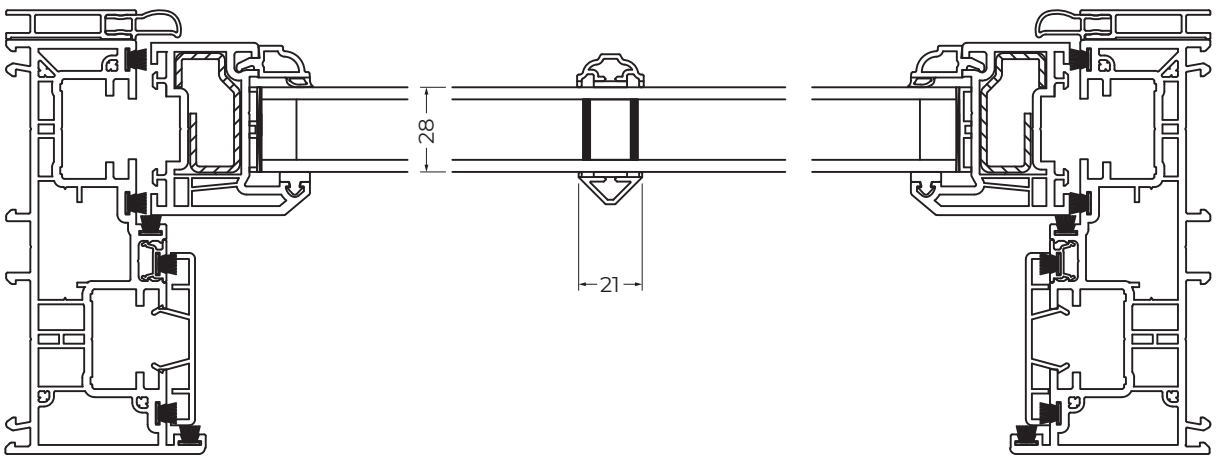

Flush standard cill option

Roseview windows

Rose collection

v1.2 June 2020
©2020 Roseview Windows