SCALE 1 : 50
SCALE 1 : 1

0m 0.5m 1m 2m 3m 4m 5m
0m 10mm 20mm 40mm 60mm 80mm 100mm

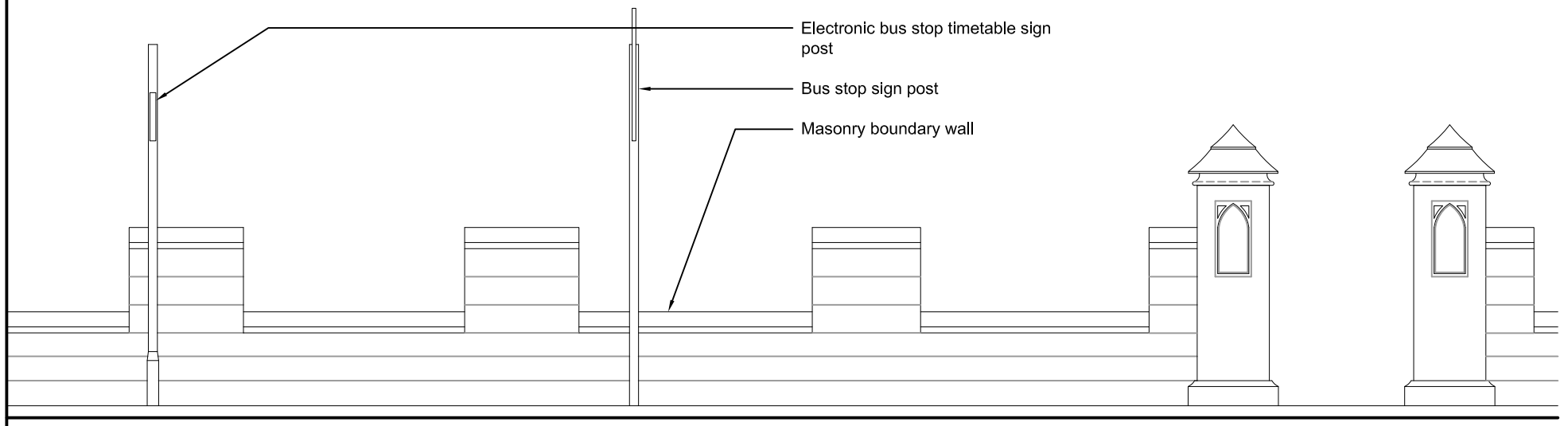

Existing Elevation:
B-IB-14 Stutts Centre
Scale 1:50

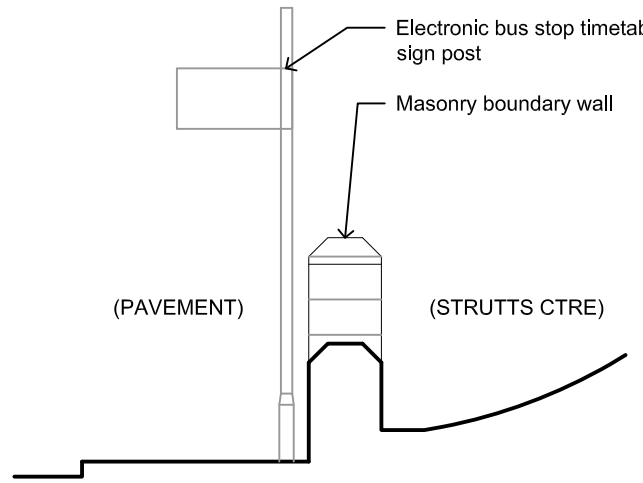

Existing Section:
B-IB-14 Stutts Centre
Scale 1:50

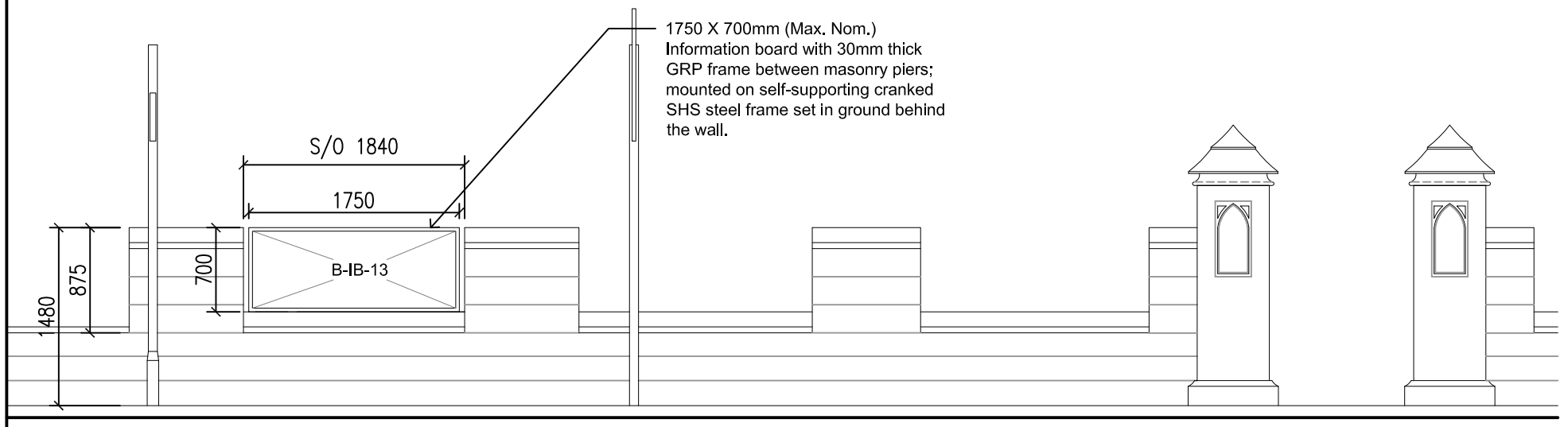

Proposed Elevation:
B-IB-14 Stutts Centre
Scale 1:50

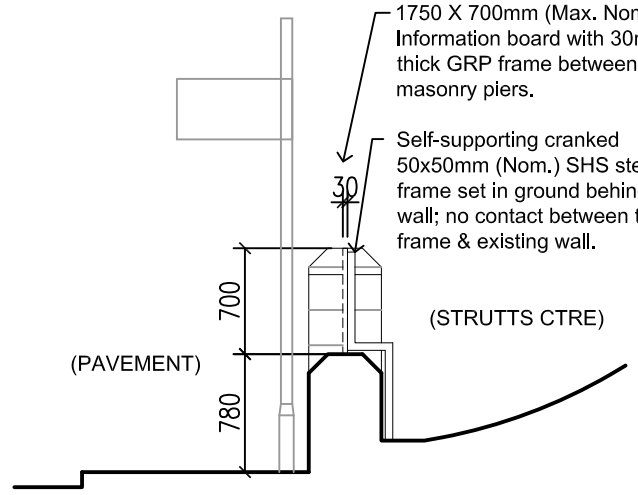

Proposed Section:
B-IB-14 Stutts Centre
Scale 1:50

Do not scale

Use only written dimensions. All dimensions must be verified prior to the works being put into hand and any discrepancies reported to the originator

HEALTH & SAFETY INFORMATION
(Refer to Pre-Tender CDM Documentation)

Rev.	Details of Revision	Date	Initial

Derbyshire County Council
Corporate Property
Director of Property:-
David Massingham
Chatsworth Hall, Matlock, DE4 3FW
Tel. (01629) 580000
Fax. (01629) 536266

Partner Details

Project
DVMWHS Great Places Scheme - Wayfinding Proposals

UPRN Number
NA

Drawing Number	Revision
B-IB13-02	

Title
Proposed & Existing Elevations Strutts Community Centre

Scale	Drawn	Checked
1:50	AG	AG
Original Size	**Date**	**Date**
A3	04.11.2022	04.11.2022

Status
For Planning

INVESTOR IN PEOPLE

This map is reproduced from the Ordnance Survey material with the permission of Ordnance Survey on behalf of the controller of Her Majesty's Stationary Office. © Crown Copyright. Unauthorised reproduction infringes Crown Copyright and may lead to prosecution or civil proceedings.100023251 2012

© Derbyshire County Council Copyright: Reproduction in whole or part by any means is prohibited without the prior written permission of the Director of Corporate Resources