The copyright of this drawing and design remains the intellectual property of YARN Architecture Limited and may not be used without written permission for anything other than the intended project. Do not scale from this drawing, use written dimensions only. All dimensions are to be verified on site by the contractor prior to work commencing. All dimensions are in mm unless otherwise stated. Any discrepancies, errors or omissions to be reported to the designer before the commencement of works. This drawing is to be read in conjunction with all other relevant architectural, structural, civil's and services drawings and specifications provided. All building materials, components and workmanship to comply with the appropriate public health acts, building regulations, British standards, codes of practice and the appropriate manufacturer's recommendations.

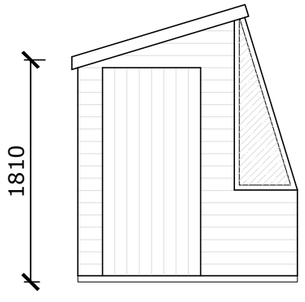

Elevation A
Scale 1:50 @ A3

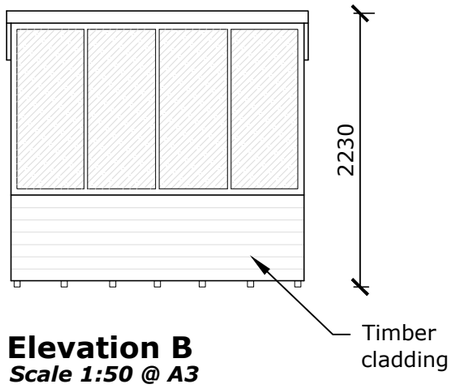

Elevation B
Scale 1:50 @ A3

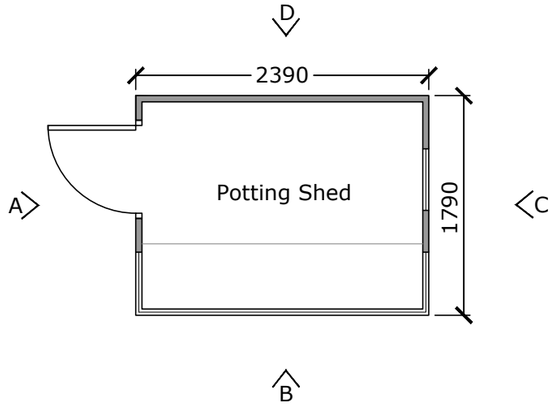

Plan
Scale 1:50 @ A3

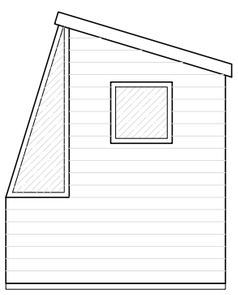

Elevation C
Scale 1:50 @ A3

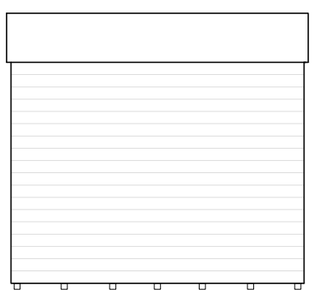

Elevation D
Scale 1:50 @ A3



Perspective Visual
NTS

rev	description	by	date

YARN architecture ©
t: 07379 433833
e: studio@yarn-architecture.co.uk
w: www.yarn-architecture.co.uk

project
8 Leggers Row
Golden Valley
Riddings
DE55 4FE

drawing title
Proposed Plan & Elevations *of*
Potting Shed

project no	drawing no	stage
2221	07-04	3

scale	size	revision
as shown	A3	-

drawn by	checked by	date
SM	-	13.01.23

drawing status

PLANNING APPLICATION