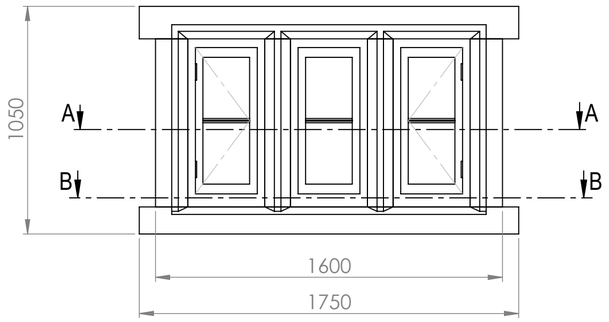

Outside View
Scale 1:20

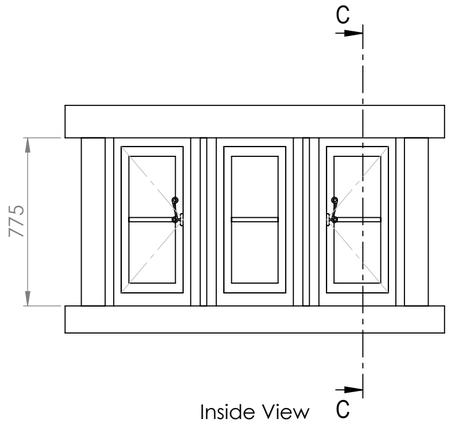

Inside View
Scale 1:20

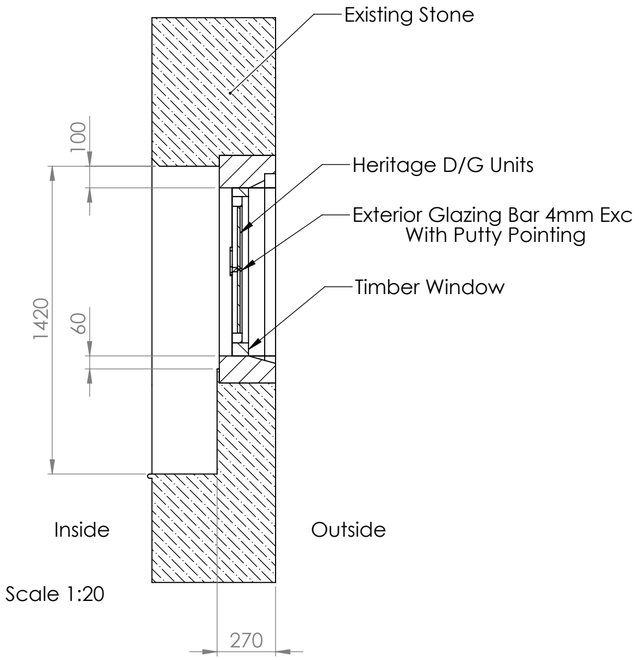

Scale 1:20

SECTION C-C

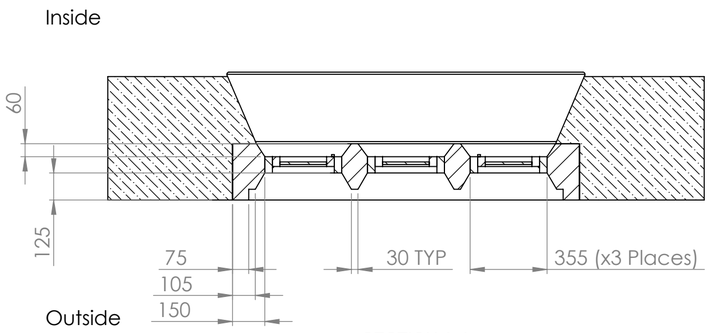

SECTION A-A

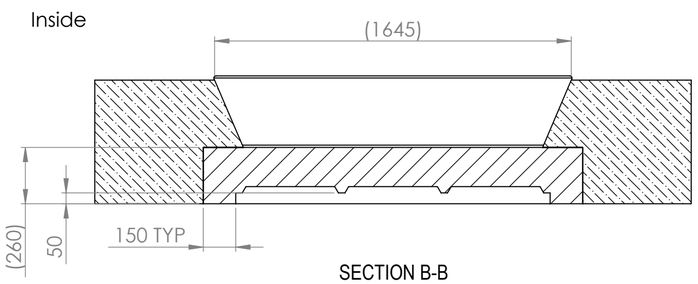

SECTION B-B

Outside

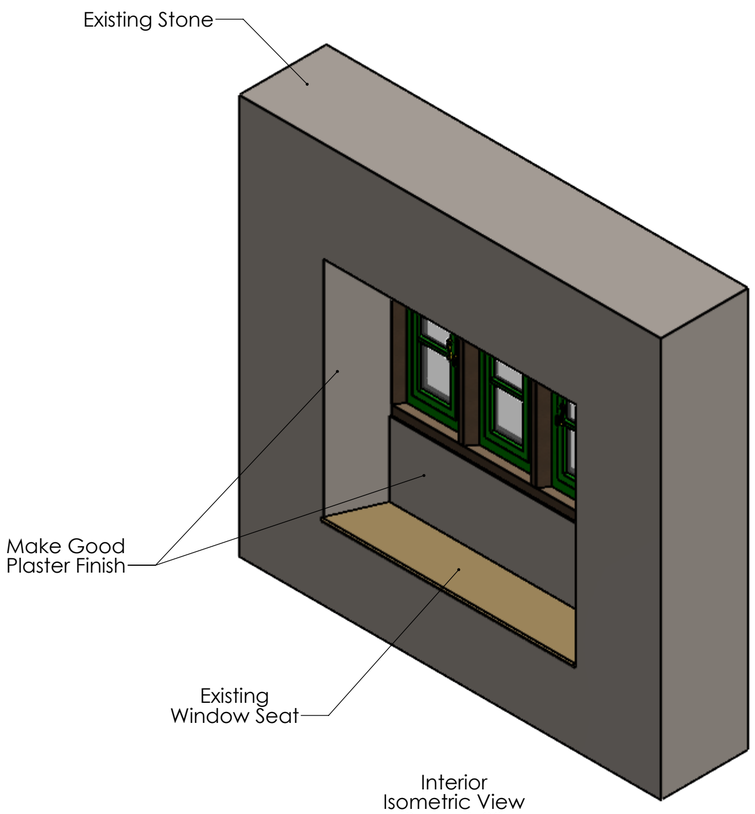

Interior
Isometric View
Scale 1:20

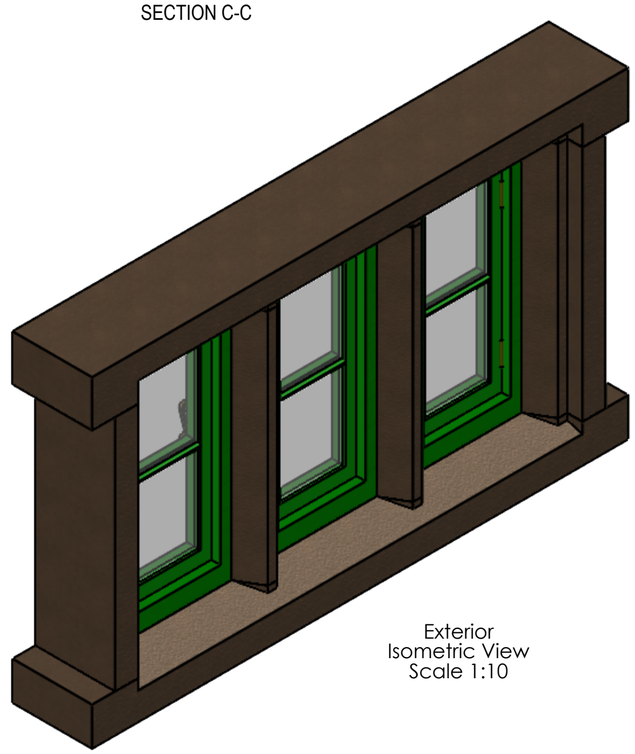

Exterior
Isometric View
Scale 1:10

REVISIONS						
REV.	DESCRIPTION	DATE	Drawing Ref:	Drawn By:	Scale	Page
-	First Floor North Elevation	24/02/2023	112 Derby Rd, Swanwick, DE55 1AD	Ellin Belton	1:20 @ A2	1 of 3

SOLIDWORKS Maker Product. For Personal Use Only.

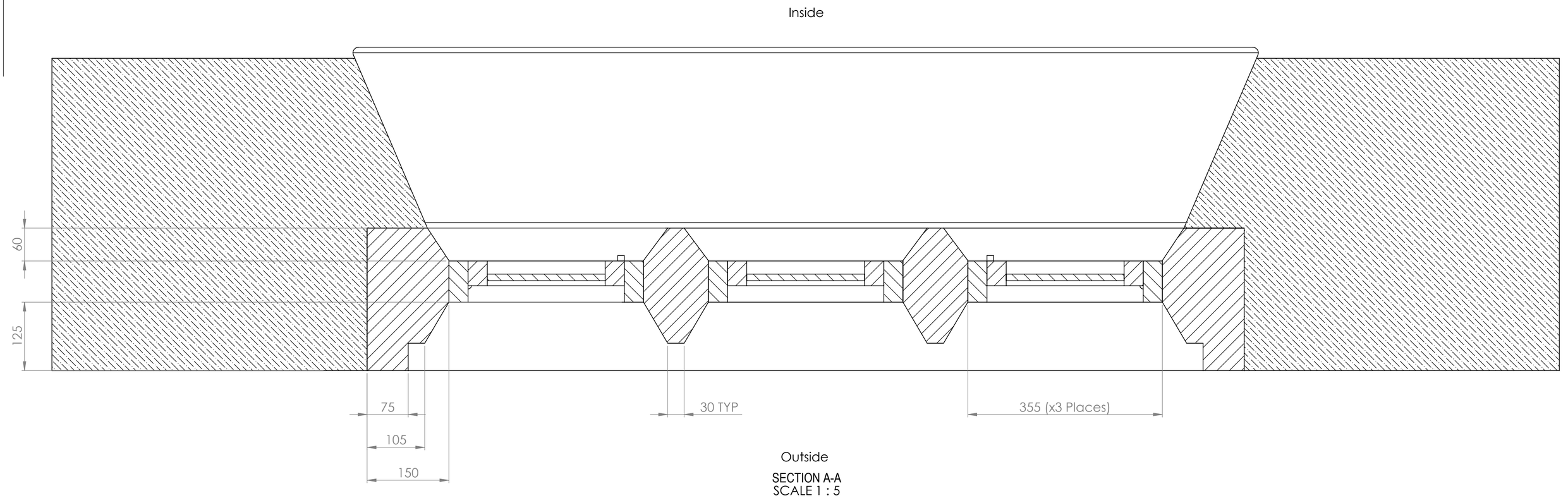

SECTION A-A
SCALE 1 : 5

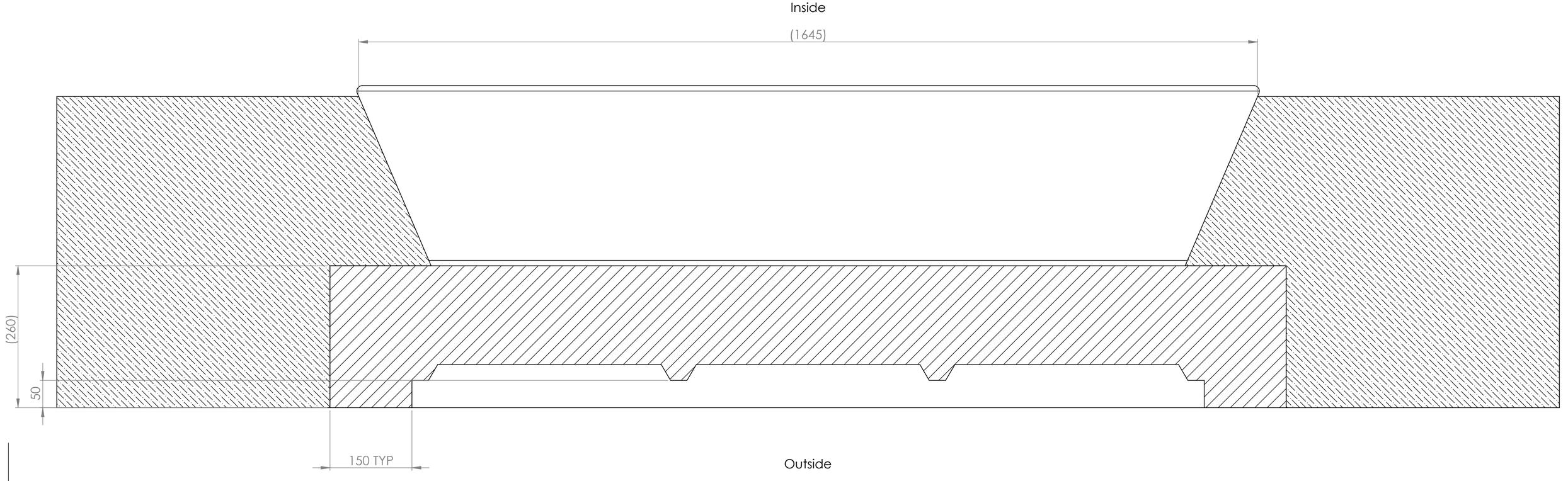

SECTION B-B
SCALE 1 : 5

DESCRIPTION	DATE	Drawing Ref:	Drawn By:	Scale	Page
First Floor North Elevation	24/02/2023	112 Derby Rd, Swanwick, DE55 1AD	Ellin Belton	1:5 @ A2	2 of 3

SOLIDWORKS Maker Product. For Personal Use Only.

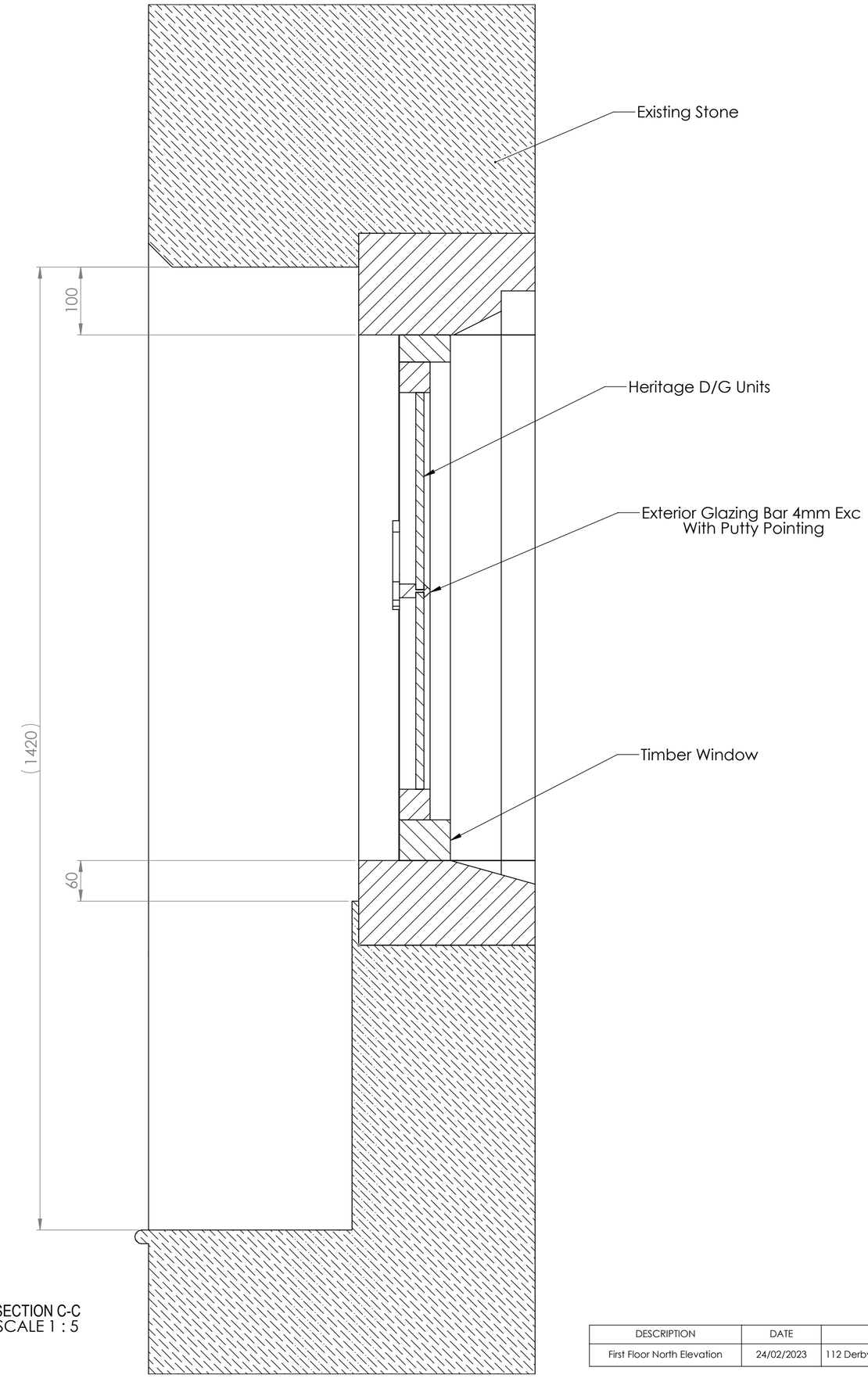

SECTION C-C
SCALE 1 : 5

DESCRIPTION	DATE	Drawing Ref:	Drawn By:	Scale	Page
First Floor North Elevation	24/02/2023	112 Derby Rd, Swanwick, DE55 1AD	Ellin Belton	1:5 @ A2	3 of 3

SOLIDWORKS Maker Product. For Personal Use Only.