Dimensions to be verified on site.
Use figured dimensions only. Do not work from reduced scale drawings. Please refer to scale and sheet size as indicated.

This drawing is the property of SCG DESIGN LTD
Copyright is reserved by them and the drawing is issued on the condition that it is not copied, reproduced, retained or disclosed to any unauthorised person without the prior consent in writing of SCG DESIGN LTD

DO NOT SCALE

NOTES

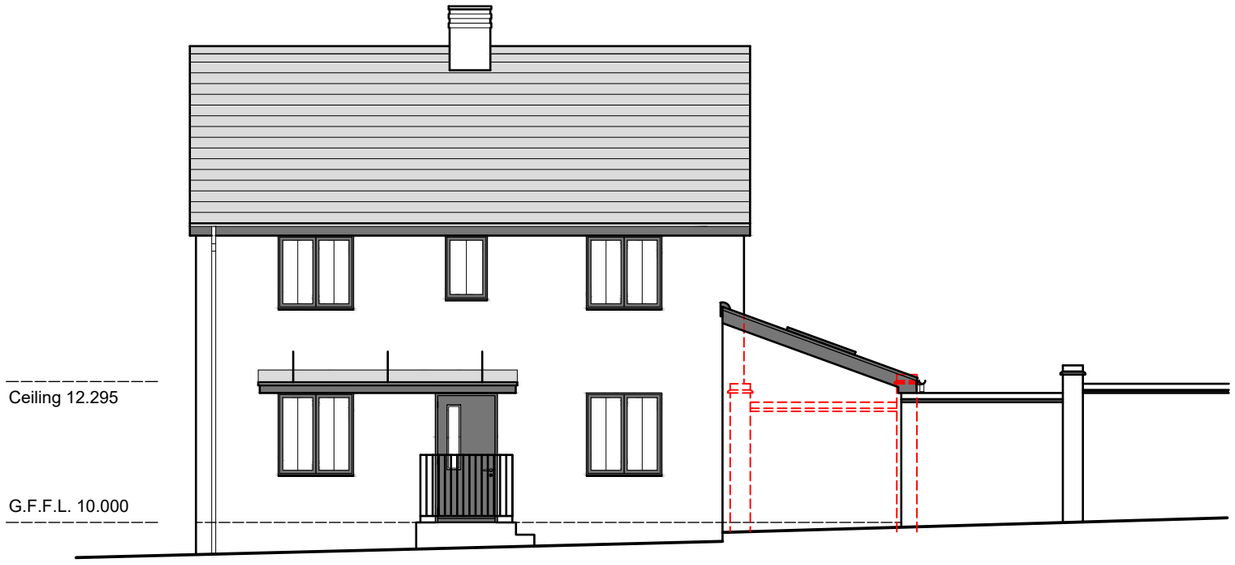

Front (South) Elevation
(Scale 1:100 @A3)

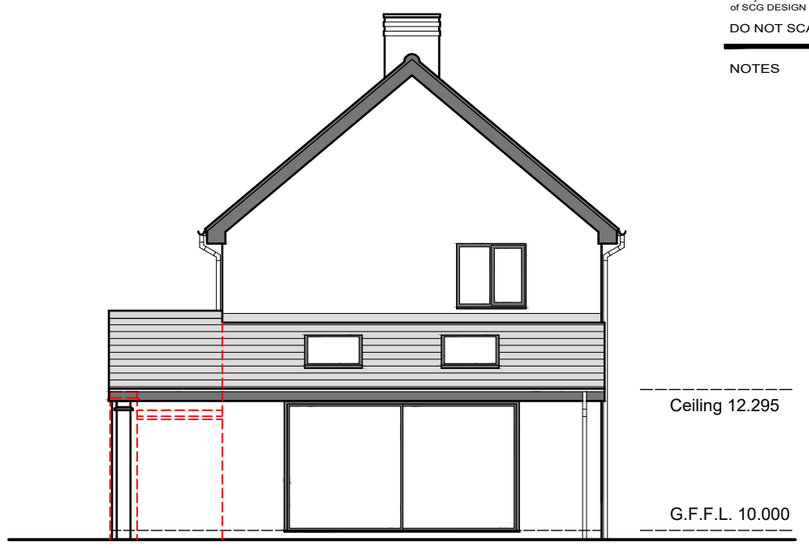

Side (East) Elevation
(Scale 1:100 @A3)

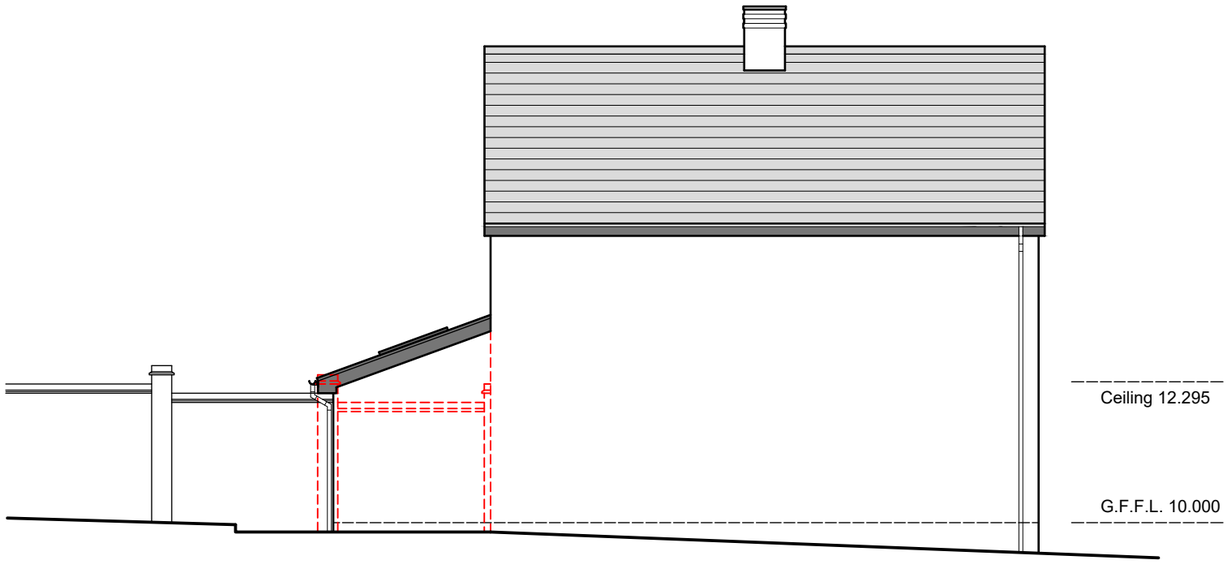

Rear (North) Elevation
(Scale 1:100 @A3)

SCALE
1:100



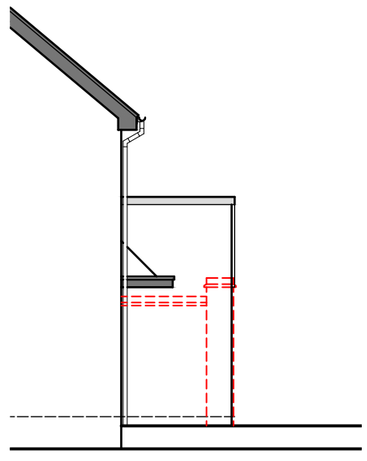

Part Side (West) Elevation
(Scale 1:100 @A3)

Rev.	Date	Revision	By	Checked

SCG DESIGN LTD
Architectural Services
SCG Design Ltd. Registration Number: 13254624
Registered in England and Wales
4 Dahlia Drive, Oakwood, Derby, DE21 2XJ
Telephone - 07825 814804 Email - scgdesign@outlook.com

Client
Shalinder Sian

Project
Proposed Extension / Alterations at:
1 Palladian Drive,
Allestree, DE22 2LX

Drawing Title
Proposed Elevations

Drawn by	Checked by
SCG	SCG
Scale @A3	Date
1:100	Feb; 2023

Job Number	Drawing Number	Revision
SCGD 564	104	-

Purpose of Issue
FOR INFORMATION