













TIMBER WINDOWS

MR T JOHNSON

IT'S THE DETAIL THAT MAKES THE DIFFERENCE!

We are passionate about wood and since our launch, our suite of products has led the market in the breadth of application, uniqueness of design, quality of construction and performance in use.

Attention to detail is a hallmark we are proud of. Our collection has been carefully and sensitively tailored to complement the English home – whether you live in a period villa, a barn conversion or a more modern property in need of contemporary flair. Unlike timber windows of old, our products will not twist, will not rot and require very little maintenance. High levels of insulation and security ensure there is no need to sacrifice beauty for comfort.

The Timber Windows service is delivered with care by knowledgeable local specialists whose reputation is built on providing an attentive service from initial enquiry to the completion of your project.

Installing well-made, well-specified timber windows can really enhance the beauty and value of your home. We look forward to working with you on your exciting project!

CONTENTS

Entrance Doors	3
French Doors	4
Overview	5
Item Summary	6
Products at a Glance	7
Itemised Product Specifications	8
What makes our products special?	10

ENTRANCE DOORS

By looking at front door designs around the country we built a collection suitable for every kind of home, from traditional styles and those suitable for conservation, to sharper, more contemporary designs.

Whichever style you choose, security is assured with robust, multi-point locking mechanisms, featuring hook bolts and deadlock.

The options for personalisation are vast, with hundreds of traditional colour and stain finishes available, that include the RAL colour chart as well those complementary to the Farrow & Ball and Fired Earth ranges. There's also the option to vary the colour on the inside of the door, so that it can match your internal décor.

Ironmongery options include stylish handles, escutcheons, knockers, letter plates, knobs and many more in a range of finishes, and why not consider decorative glazing in a range of stained, patterned, leaded, sandblasted and etched designs.

All of our doors use multi- layered, warp and twist resistant timber throughout their construction, with high specification glazing fitted as a standard. Factory applied paint finishes ensure a long life with very low maintenance.



FRENCH DOORS

Practical yet beautiful, the Timber Windows range of French Doors can enhance both your home and lifestyle, providing easy access to outdoor spaces.

Authentically styled, with both conventional and contemporary designs, these doors offer the flexibility of opening inwards or outwards, with either door designed to open first. Leaded lights or glazing bars may be added whilst you can also choose a different colour internally to suit your décor.

The use of engineered multi-layered, warp and twist resistant timber throughout their construction, ensures they will operate beautifully at all times.

Constructed to the same exacting standards as our windows, with timber guaranteed for decades, our French Doors incorporate a host of technical innovations for absolute peace of mind.

French doors add flexibility and elegance, while performance and security is thoroughly modern. Ventilation grooves and glazing units which lose approximately half the heat of ordinary double glazing ensure your comfort is optimised, and locks which engage in multiple points around the perimeter of every opener keep you safe and secure.



QUOTATION OVERVIEW FOR: Mr T Johnson
QUOTE REF: 3105/1 V1

TIMBER WINDOWS

QUOTE PREPARED FOR	SITE ADDRESS	PREPARED BY	LEAD TIME	TERMS
Mr T Johnson 4 Nottingham Road Belper Derbyshire DE56 1JG	(Same as quote address)	Alister Walters Sales **Showroom:** Ripley	Approximately 8-10 weeks from sign off of final detail.	• Deposit with order 25%. • Two Weeks Before Installation Begins 65%. • Balance one week after installation 10%.

SCOPE OF PROJECT

Replacement - Carefully remove existing items, prepare openings and supply and fit replacements. To include all making good of aperture ready for final decoration by others. All installed in full compliance with Building Regulations Document L (2010 Edition) by our trained and experienced installers.

TECHNICAL SPECIFICATION

All products in multi-layer Engineered Meranti sections for added stability. Internally beaded throughout for security. Factory glazed with argon gas filled double glazed units featuring soft-coat energy saving glass. Drained and vented sections to protect against sealed unit failure. Fully factory finished with high performance, micro-porous paint treatments. Entrance doors fitted with multi-point claw locks and robust, adjustable hinges. French doors fitted with multi-point claw locks to master doors, flush bolts to slave door. Robust, adjustable hinges.

PRICE

Net Price:	£0.00
VAT (20%):	£0.00
Total Purchase Price:	£0.00

Your quotation is valid for 60 days from Thursday 30th March 2023

GUARANTEES



* 5 years for 14mm double glazed units. * 6 years for Meranti & Redwood. 1 year for Oak. Not applicable to putty finished products.

ITEM SUMMARY FOR: Mr T Johnson
QUOTE REF: 3105/1 V1

TIMBER WINDOWS

ITEM	QTY	ITEM REFERENCE	PRODUCT	REMARKS
1	1	Entrance Door	Entrance Door	Cottage - Black handle. French Grey Finished.
2	1	French Doors	French Door	Cottage - Black handle. Light Oak Finished.

1. Entrance Door (Entrance Door)

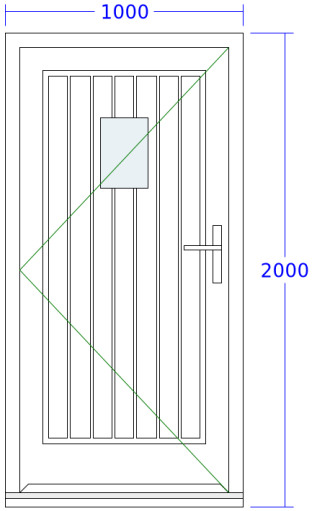

2. French Door (French Doors)

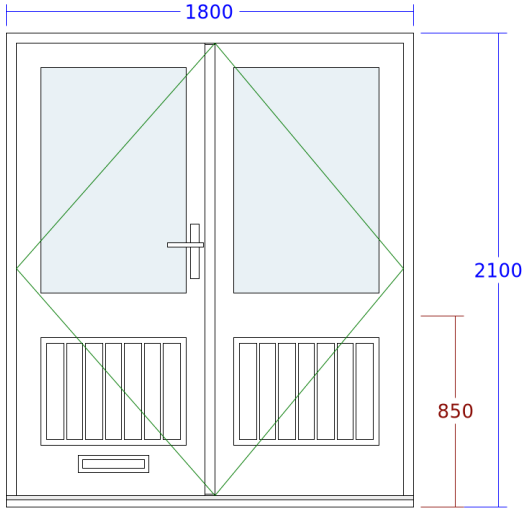

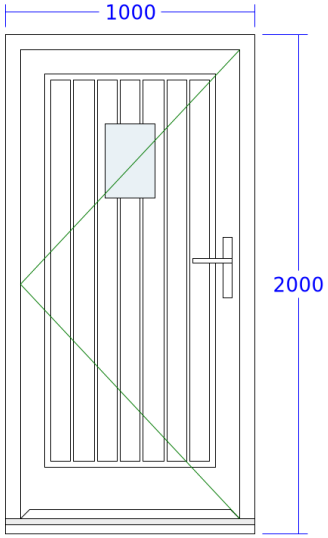

Drawing Notes: Viewed from outside. Arrow denotes opening position.
Drawings do not depict knockers, spy holes, security chains or doorknobs. Refer to brochure for full glazing configurations.

IRONMONGERY OPTIONS



Cottage - Black Handle
(Kaba)

COLOUR CHOICES



Colour
French Grey
(RAL 7032)

GLASS & FRAME CHOICES



Door Sash Glass Pattern
Kathedral
(Obscure Glass)

SIZE SPECIFICATIONS

Cill	145mm x 35mm (inc. in overall ht)
Door Glass Size (Visible)	Width: 200mm / Height: 300mm
Frame Head Size	60mm
Overall Height	2000mm
Overall Width	1000mm
Stiles & Rails	110mm

TECHNICAL SPECIFICATIONS

Add Ons Required	No
Cill Horns	No
Cill Species	Engineered Meranti
Cill Type	Projecting Cill
Door Glass Size (Visible)	Width: 200mm / Height: 300mm
Door Knocker	No
Door Opens	In
Door Panel(s)	Plank Effect
Door Sash Style	Staverton
External Access	Yes
FSC® Certified	No
Feature Mould	Ovolo
Glass Type	4mm Toughened
Head Drip	None
Hinge Colour	Black
Hinge Side	Left
Letterbox	None
Security Chain	None
Threshold Colour	Black
Thumb Turn Required	Yes (Kaba)
Trickle Vents Required	No

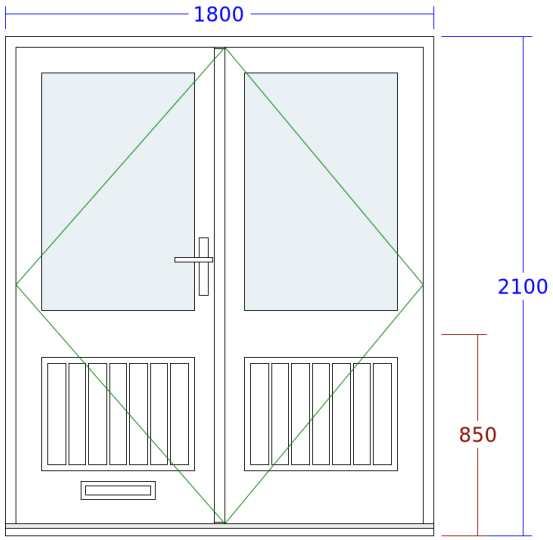

Drawing Notes: Viewed from outside. Arrow denotes opening position.
Drawings do not depict knockers, spy holes, security chains or doorknobs. Refer to brochure for full glazing configurations.

IRONMONGERY OPTIONS



Cottage - Black Handle (Kaba)



Blacksmith Traditional - Black Letterbox

COLOUR CHOICES



Colour
Light Oak

SIZE SPECIFICATIONS

Cill	145mm x 35mm (inc. in overall ht)
Frame Head Size	60mm
Mid-Rail Height	850mm
Overall Height	2100mm
Overall Width	1800mm
Stiles & Rails	110mm

TECHNICAL SPECIFICATIONS

Add Ons Required	No
Cill Horns	No
Cill Species	Engineered Meranti
Cill Type	Projecting Cill
Door Knocker	No
Door Opens	Out
Door Panel(s)	Plank Effect
Door Sash Glass Pattern	Clear
Door Sash Glazing Features	None
Door Sash Style	Stratfield
External Access	Yes
FSC® Certified	No
Feature Mould	Ovolo
Glass Type	4mm Toughened
Head Drip	None
Hinge Colour	Black
Letterbox Door Position	Sash Bottom
Primary	Left
Security Chain	None
Threshold Colour	Black
Thumb Turn Required	Yes (Kaba)
Trickle Vents Required	No

WHAT MAKES OUR PRODUCTS SPECIAL?

All of our windows and doors are bespoke; this means they are made to the exact requirements of you the customer and of your home. They combine traditional or contemporary appearance with 21st century advances in security and insulation.

Frames are manufactured using quality, seasoned engineered timber – which provides resistance against twisting and jamming as the opposing grains even out natural moisture movement.

Comprehensive insurance backed guarantees of up to 30 years – covering your deposits and your installation for added piece of mind.

Four stage factory sprayed micro-porous coatings – ensure a pristine, low maintenance finish with a guarantee to the term of 12 years on paint finishes and up to 6 years on stained without the need for redecoration.

Factory fitted energy saving double glazed units – which are almost twice as effective at retaining heat as regular double glazing. Heat reflective coatings and argon filled units provide a class leading U-value of 1.1 W/m^2K.

Internally beaded glass – means more secure windows and doors as the glazing cannot be removed from the outside. The bead of externally glazed products is always a point for water ingress, rot and can lead to premature unit failure.

Windows are fitted with perimeter locking systems – which pull the opening window tight against the seals for security, heat insulation and noise insulation. All window handles are key locking to meet current insurance requirements.

Doors are fitted with full height locking systems – and solid brass or stainless steel hinges for security and weather tightness. Cylinders are snap-safe, anti-bump, anti-pick and anti-drill to combat modern methods of burglary.

Vented and drained double glazed units – allow moisture to escape and air to flow around the seals to prevent premature misting and failure of the glass. Units carry a 10 year guarantee.

Dual colour and colour matching available – we are able to offer a range of colours that complement those from well-known paint brands such as Farrow & Ball, Fired Earth and RAL colours.

A huge choice of traditional and contemporary hardware – to suit all types of property. Choose from a purpose designed suite from Samuel Heath and a range of traditional ironmongery designed by 'Timber Windows'.

Selection of astragal glazing bar sizes – to choose from. Bars are manufactured as a separate cassette which is preassembled and jointed with screws and staples. It is then bonded to the glass, pinned into the frame and sealed with a 'flexi-seal'. This avoids the problems associated with joinery products when bars are mitred and individually double-sided taped to the glass with no additional protection.