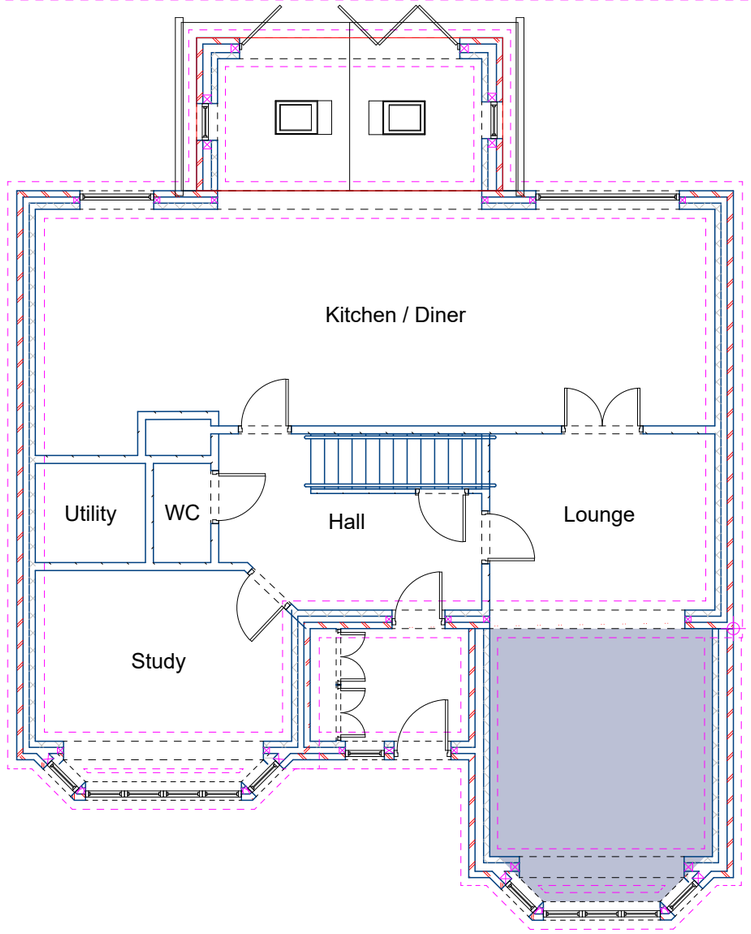

Ground Floor

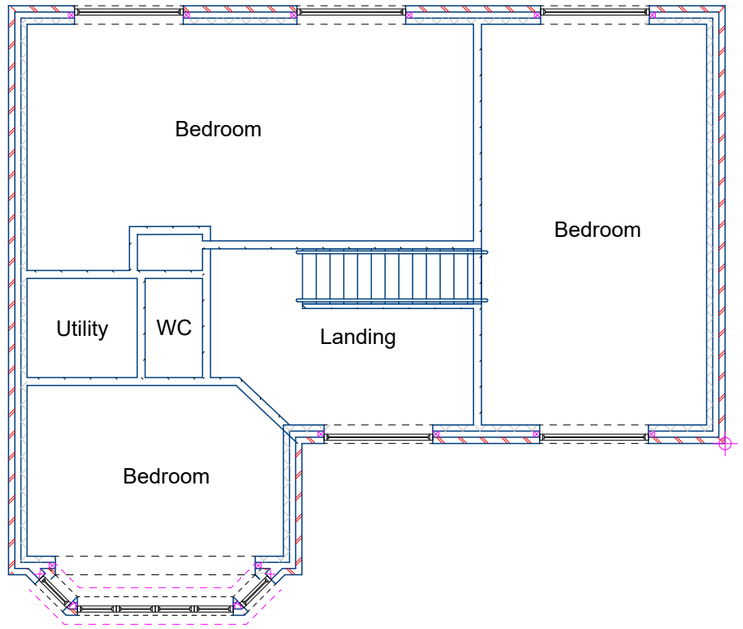

1st Floor

Grange Road

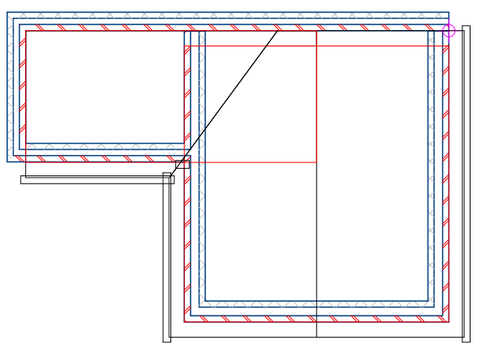

Roof Detail - Front Extension and Porch

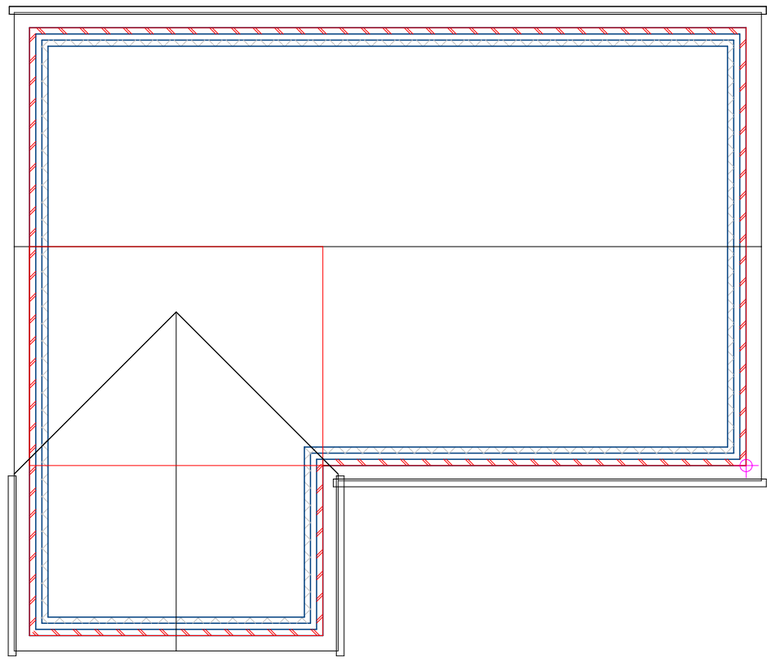

Roof

Notes

Do not scale from the drawings.
Dimensions to be checked on site, where discrepancies occur, seek advice from the client's representative for clarification.
The drawings & specifications are a guide as to what is required to comply with the current building regulations. This does not imply that this is the only acceptable way of achieving building regulations approval. Alternative 'similar approved' products may be used at the discretion of the Building Inspector.
No liability is accepted for any loss of any sort or additional expense incurred consequent on any variation to the layout or specification that may be required as a result of site conditions, availability of materials, custom or practice, the requirements of the Building Inspector or any other circumstances.



Project
Front and Rear Extension
34 Grange Road
Langley Park
Derby DE22 4NX
Drawing Title
Proposed Plan Views
Client
Dr Sunil Mistry
Drawing No.
DE224NX34 - 03 Revision 01
Date
03 / 2023
Scale
1:100
Drawn by
SGB
Page Size - A3
2000mm

140 Blenheim Drive Allestree Derby DE22 2GN
Mobile 07305 998678
E-mail steve@allestreedesignservices.com