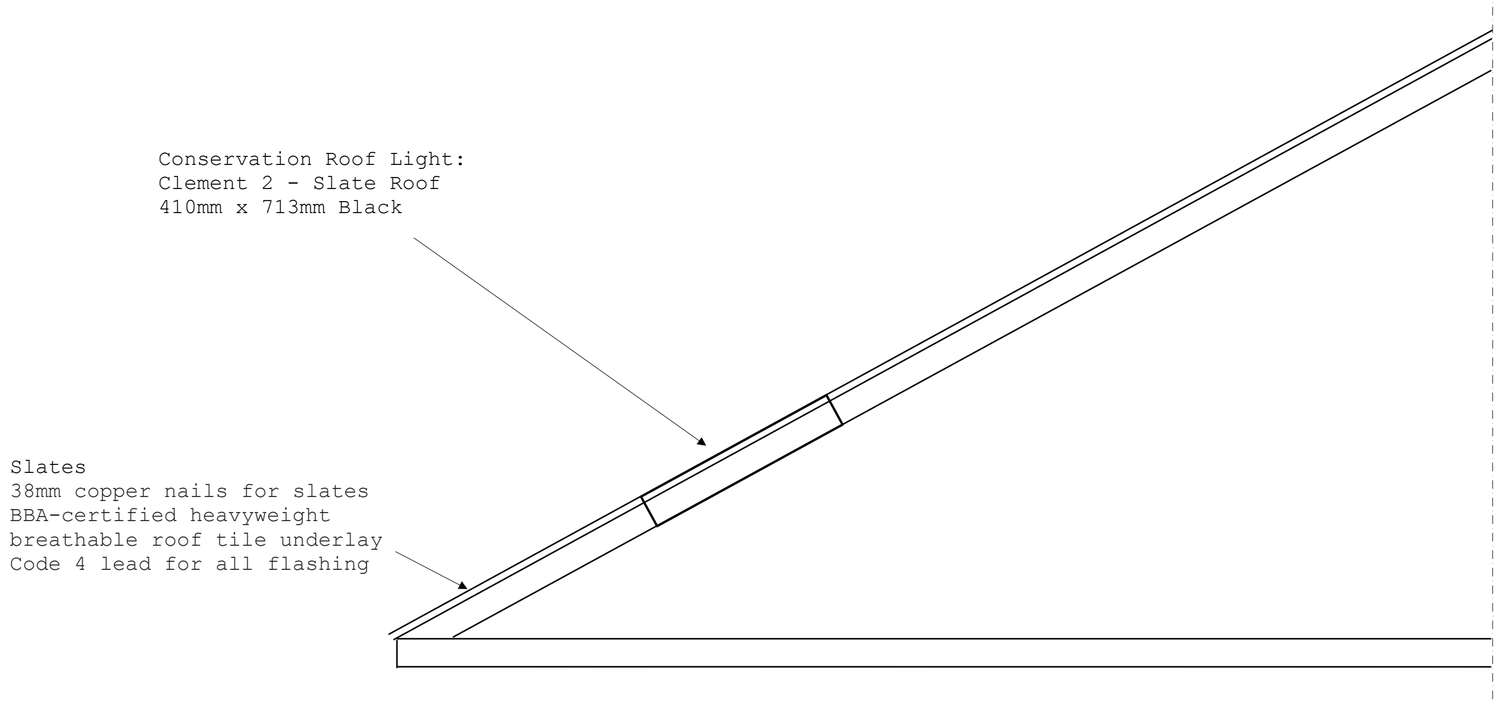

Proposed West Section

Roof Sectional Drawing
Planning Application ref: AVA/2023/0121
38 George St, Belper DE56 1DL
February 2023
Scale 1:20