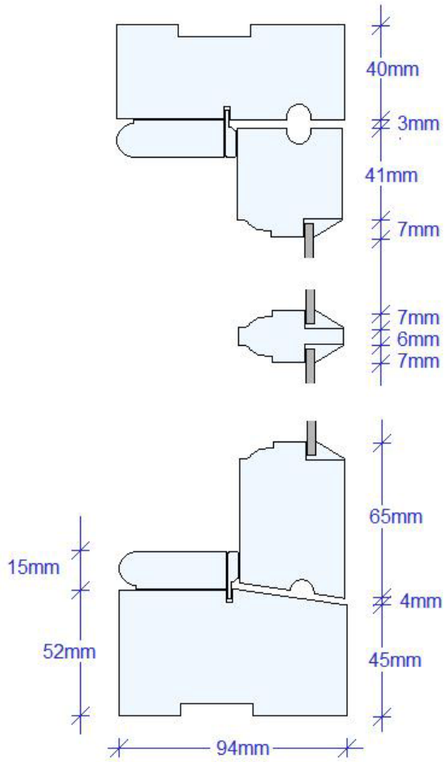

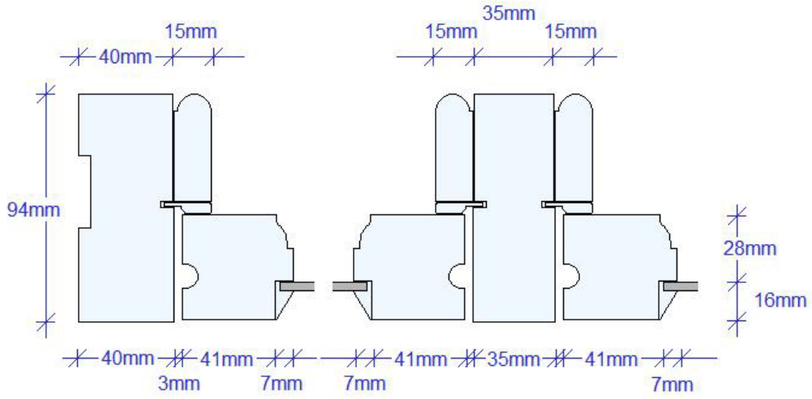



fastener set up 795mm to centre
of keep from bottom of light



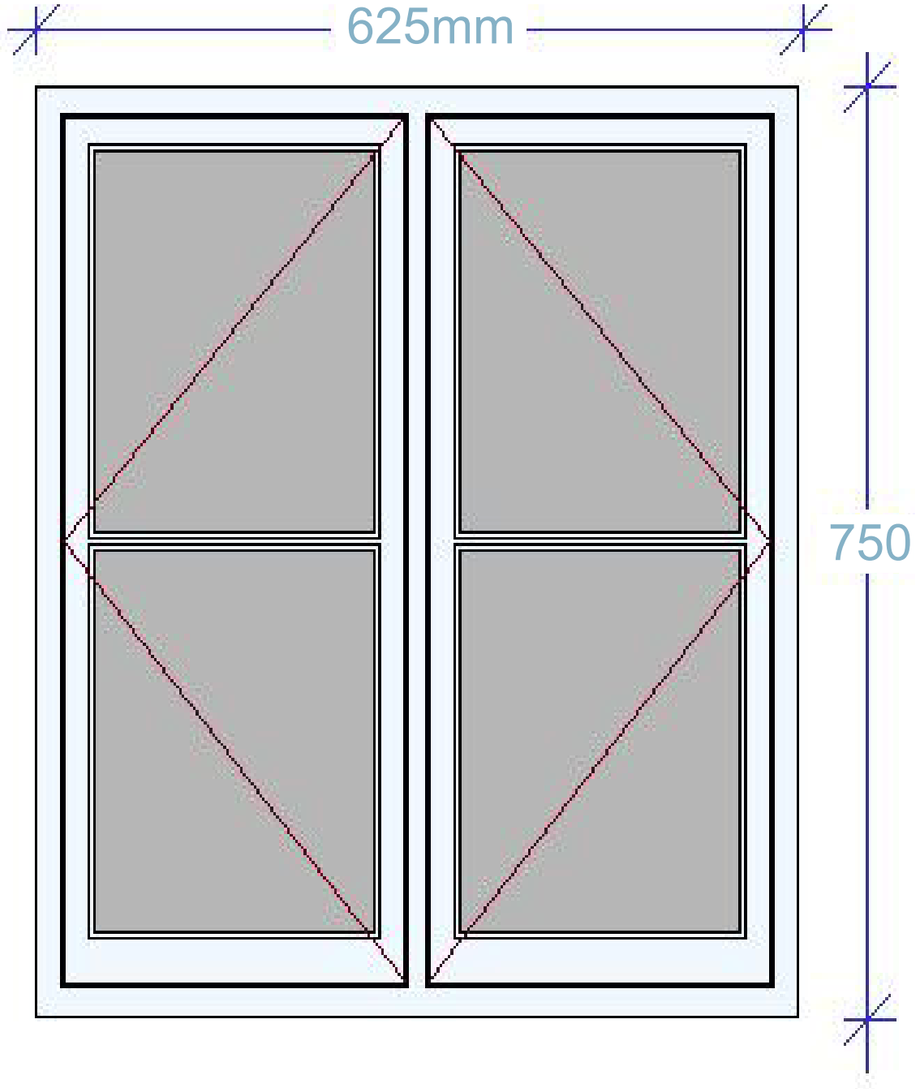

ACCOYA FLUSH CASEMENT WINDOW
SINGLE GLAZED
WEATHERSEALED
F&B JAMES WHITE FULL FINISH
MONKEY TAIL STAYS & FASTENERS (LOCKING PINS)
SUPPLY & INSTALLATION

TOUGHENED GLASS REQUESTED (NO KITE MARKS)

00125-1 Proposed Window Detail 1:5

SIGMA ARCHITECTS

Babington Lodge
128 Green Lane
Derby
DE1 1RY

info@sigma-architects.co.uk

www.sigma-architects.co.uk

Do not scale from this drawing. Dimensions and levels to be checked on site by the contractor. All dimensions in millimetres unless otherwise noted. All levels in metres unless otherwise noted. Any discrepancies in dimensions or details between the drawings and/or specifications should be drawn to the attention of Sigma Architects Limited. Where read in conjunction with other designers information it is the responsibility of the Contractor to cross-check design information and report any discrepancies before work is undertaken.

This drawing has been prepared solely for use of the Client and is not to be copied or used by any third party without explicit written permission.

Copyright 2023. All rights reserved. The title, copyright and confidential information in this document belongs to Sigma Architects Limited. You may not reproduce this document or disclose it to others without the consent of Sigma Architects Limited.

project:
Old Rectory Farmhouse
Muggington
Ashbourne
DE6 4PL

client:
Mr & Mrs Bielby

revision:	by:	date:	description:
S3-P01	LS	14/04/2023	Planning issue
S3-P02	LS	25/04/2023	Window unit revised

drawing name:
Window Detail

drawing number:
00125

project stage:
RIBA 3: Spatial Coordination (Planning)

status / revision:
S3-P02

project number:
0133

scale / format:
1:5 @ A3